Butterfly valve with Lug types

- For open and closed water systems
- For switching heat generators or cooling machines on/off

Picture may differ from product

Type overview

Type	DN	Kvmax [m³/h]	Kvs [m³/h]	PN	n(gl)
D6200WL	200	2200	820	16	3.2
D6250WL	250	4200	1300	16	3.2
D6300WL	300	5700	1740	16	3.2

Technical data

Functional data	Fluid	Water, water with glycol up to max. 50% vol.
	Fluid temperature	-20...120°C [-4...248°F]
	Differential pressure Δpmax	300 kPa
	Flow characteristic	0...60% opening angle: equal percentage (VDI/VDE 2173) 0...100% opening angle: S-form
	Flow characteristic note	0...100% opening angle: linear The flow characteristic can be configured to equal percentage or linear using Belimo Assistant 2.
	Leakage rate	tight, leakage rate A (EN 12266-1)
	Angle of rotation	90°
	Pipe connection	Flange according to ISO 7005-2 according to EN 1092-2
	Installation orientation	upright to horizontal (in relation to the spindle)
	Servicing	maintenance-free
Materials	Valve body	EN-GJS-400-18-LT (GGG 40.3)
	Closing element	Stainless steel AISI 304 (CF-8, 1.4308)
	Spindle	Stainless steel AISI 420 (1.4021)
	Spindle seal	EPDM O-ring
	Spindle bearing	Bronze, steel, PTFE
	Seat	EPDM

Safety notes

- The valve has been designed for use in stationary heating, ventilation and air-conditioning systems and must not be used outside the specified field of application, especially in aircraft or in any other airborne means of transport.
- Only authorised specialists may carry out installation. All applicable legal or institutional installation regulations must be complied with during installation.
- The valve does not contain any parts that can be replaced or repaired by the user.
- The valve may not be disposed of as household refuse. All locally valid regulations and requirements must be observed.
- When determining the flow rate characteristic of controlled devices, the recognised directives must be observed.
- The damper must be opened and closed slowly in order to avoid hydronic shocks in the pipe system.
- The valve is not allowed to be operated without actuator or worm gear while flow is in the pipe. Without actuator or worm gear, the valve could close and cause damage (water hammer).

Product features

Operating mode

The butterfly valve is opened or closed completely by an open/close rotary actuator. Continuous rotary actuators are connected by a commercially available controller and move the valve to any position desired. The valve disk is pressed into the soft-sealing EPDM seat by a rotary movement and ensures leakage rate A (tight). The pressure losses are slight in the open position and the Kv value is at a maximum.

Manual override

Manual throttling or isolation can be carried out with a worm gear (see «Accessories»).

The worm gear with position indication is steplessly adjustable (self-locking).

Accessories

Mechanical accessories

Description	Type
Worm gear for butterfly valves DN 125...300	ZD6N-S150

Installation notes

Permissible installation orientation

The butterfly valves may be mounted upright to horizontal. The butterfly valves may not be installed in a hanging position i.e. with the spindle pointing downwards.

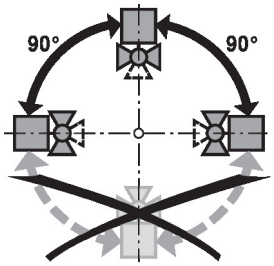

Water quality requirements

The water quality requirements specified in VDI 2035 must be adhered to.

Servicing

Butterfly valves and rotary actuators are maintenance-free.

Before any service work on the control element is carried out, it is essential to isolate the rotary actuator from the power supply (by unplugging the electrical cable if necessary). Any pumps in the part of the piping system concerned must also be switched off and the appropriate slide valves closed (allow all components to cool down first if necessary and always reduce the system pressure to ambient pressure level).

The system must not be returned to service until the butterfly valve and the rotary actuator have been reassembled correctly in accordance with the instructions and the pipeline has been refilled by professionally trained personnel.

To avoid a torque increase during off season shut down, exercise the butterfly valve (full open and close) at least once a month.

Installation notes

Flow setting

The Belimo butterfly valves have an approximate equal percentage characteristic curve between 0...60% opening angle.

The following table shows the respective Kv values in relation to the opening angle (%).

		10%	20%	30%	40%	50%	60%	70%	80%	90%	100%
DN 200	Kv (m3/h)	10	60	170	330	540	820	1200	1640	2000	2200
DN 250	Kv (m3/h)	10	100	280	530	850	1300	1920	2710	3580	4200
DN 300	Kv (m3/h)	30	160	400	710	1130	1740	2560	3610	4790	5700

Configuration linear characteristic curve

The flow characteristic can be set to linear using Belimo Assistant 2.

The following table shows the respective Kv values in relation to the control signal (%).

		10%	20%	30%	40%	50%	60%	70%	80%	90%	100%
DN 200	Kv (m3/h)	220	440	660	880	1100	1320	1540	1760	1980	2200
DN 250	Kv (m3/h)	420	840	1260	1680	2100	2520	2940	3360	3780	4200
DN 300	Kv (m3/h)	570	1140	1710	2280	2850	3420	3990	4560	5130	5700

Differential and close-off pressure

The maximum differential and close-off pressure of butterfly valves depends on diameter and type of the mounted actuator.

To ensure optimum operation and maximum service life, the maximum differential and close-off pressure must not be exceeded.

Please refer to the corresponding table of values in the notes for project planning.

Dimensions

Dimensional drawings

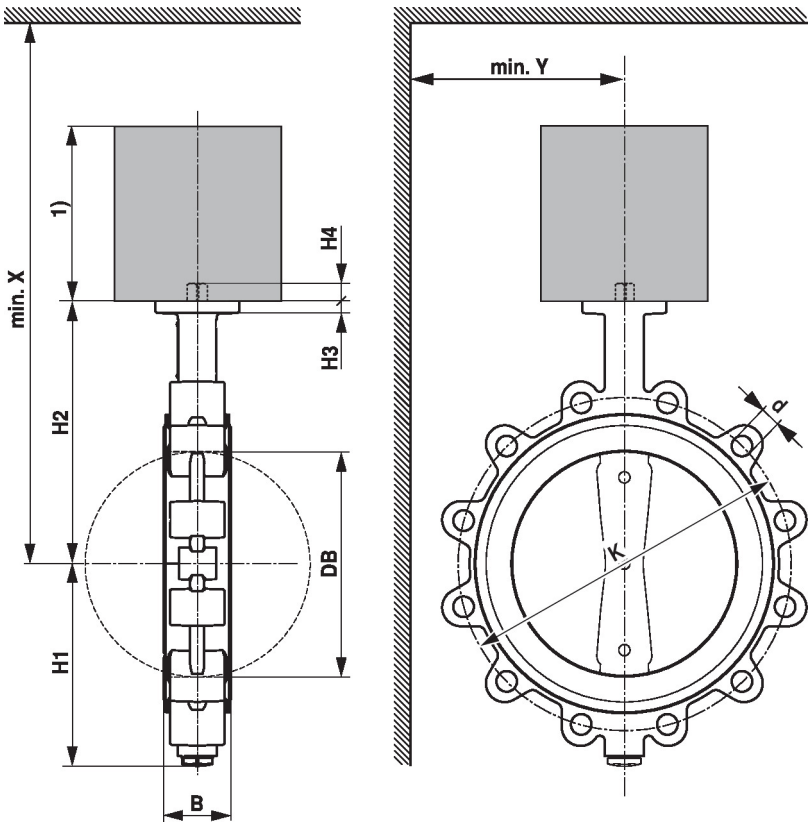

The actuator dimensions can be found on the respective actuator data sheet.

Dimensions

Type	DN	B [mm]	DB [mm]	H1 [mm]	H2 [mm]	H3 [mm]	H4 [mm]	d (PN16)	K (PN16) [mm]	X [mm]	Y [mm]	kg
D6200WL	200	60	195	175	250	15	19	12 x M20	295	500	300	14
D6250WL	250	68	245	215	280	15	19	12 x M24	355	530	300	20
D6300WL	300	78	293	247	325	15	19	12 x M24	410	580	300	31

Further documentation

- The complete product range for water applications
- Data sheets for actuators
- Installation instructions for actuators and/or butterfly valves
- General notes for project planning