Rotary actuator in connection with a mounting kit for the motorisation of the most common mixing valves in HVAC systems

- Torque motor 10 Nm
- Nominal voltage AC 24 V
- Control 3-point
- Running time motor 140 s

Picture may differ from product

Technical data

Electrical data	Nominal voltage	AC 24 V
	Nominal voltage frequency	50/60 Hz
	Nominal voltage range	AC 19.2...28.8 V
	Power consumption in operation	1.5 W
	Power consumption for wire sizing	1.5 VA
	Connection supply / control	Cable 1 m, 3x 0.75 mm^2
	Parallel operation	No
Functional data	Torque motor	10 Nm
	Direction of motion motor	clockwise rotation (cw)
	Manual override	temporary and permanent gear train disengagement with rotary knob on the housing
	Angle of rotation	90°
	Running time motor	140 s / 90°
	Sound power level, motor	37 dB(A)
	Duty cycle value	75% (= active time 140 s / operating time 187 s)
	Position indication	Reversible scale plate
Safety data	Protection class IEC/EN	III, Safety Extra-Low Voltage (SELV)
	Degree of protection IEC/EN	IP40
	EMC	CE according to 2014/30/EU
	Type of action	Type 1
	Rated impulse voltage supply / control	0.8 kV
	Pollution degree	3
	Ambient humidity	Max. 95% RH, non-condensing
	Ambient temperature	0...50°C [32...122°F]
	Storage temperature	-30...80°C [-22...176°F]
	Servicing	maintenance-free
Weight	Weight	0.49 kg
Housing colours	Housing cover	orange
	Housing base	black

Safety notes

- This device has been designed for use in stationary heating, ventilation and air-conditioning systems and must not be used outside the specified field of application, especially in aircraft or in any other airborne means of transport.
- The actuator is to be protected against moisture. It is not suitable for outdoor applications.
- To calculate the torque required, the specifications supplied by the mixing valve manufacturer must be observed.
- Only authorised specialists may carry out installation. All applicable legal or institutional installation regulations must be complied with during installation.
- The installer must check for correct principle of operation after installation.
- The device does not contain any parts that can be replaced or repaired by the user.
- The device contains electrical and electronic components and must not be disposed of as household refuse. All locally valid regulations and requirements must be observed.
- Caution: Low voltage!

Product features

Operating mode
The actuator is activated with a 3-point signal.

Simple direct mounting
Simple direct mounting with only one screw. The stud bolt included in delivery serves as an anti-rotation mechanism. The mounting orientation can be freely selected in steps of 90°.

Manual override
Manual override with lever possible. Temporary gear train disengagement by pushing the rotary knob. Permanent disengagement by pushing and simultaneous rotating the rotary knob clockwise 90°.

High functional reliability
The actuator switches off automatically when the end stops are reached.

Accessories

Electrical accessories

Description	Type
Auxiliary switch 1x SPDT for 3-point HT actuators with cable connection	SNR

Mechanical accessories

Description	Type
Mounting kit for LK mixing valve	MS-NRA
Mounting kit for Barberi mixing valves	MS-NRB
Mounting kit for Honeywell/Centra DR..MA mixing valves	MS-NRC
Mounting kit for Honeywell/Centra DRU.. mixing valves	MS-NRC1
Mounting kit for mixing valves with 12 mm round shaft	MS-NRE
Mounting kit for ESBE mixing valves VRG/VRB/VRH	MS-NRE6
Mounting kit for Hora mixing valves	MS-NRH
Mounting kit for Siemens/Landis&Stäfa mixing valves VCI/VBG/VBF	MS-NRL
Mounting kit for Lazzari mixing valves	MS-NRLA
Mounting kit for Lovato mixing valves	MS-NRLO
Mounting kit for Satchwell MB mixing valves	MS-NRS
Mounting kit for Satchwell MBF mixing valves	MS-NRSF

Electrical installation

Caution: Mains voltage!

Wire colours:
1 = black
2 = white
3 = white

Electrical installation

AC 24 V, 3-point

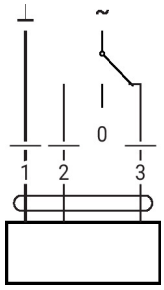

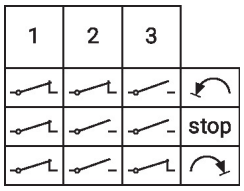
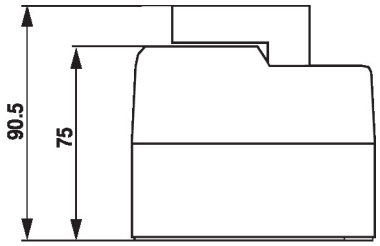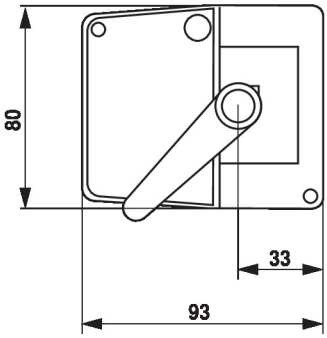
Dimensions