Duct/Immersion sensor Temperature

For measuring temperature in duct applications. In connection with a stainless steel or brass thermowell also applicable for pipe applications. IP65 / NEMA 4X rated housing.

Type Overview

Type	Output signal	Probe length	Probe diameter
01DT-1NH	NTC10k Carel	50 mm	6 mm
01DT-1NL	NTC10k Carel	100 mm	6 mm
01DT-1NN	NTC10k Carel	150 mm	6 mm
01DT-1NP	NTC10k Carel	200 mm	6 mm
01DT-1NR	NTC10k Carel	300 mm	6 mm

Technical data

Electrical data	Electrical connection	Pluggable spring loaded terminal block max. 2.5 mm²
	Cable entry	Cable gland with strain relief ø6...8 mm
Functional data	Medium	Air Water
Measuring data	Measured values	Temperature
Specification temperature passive	Measuring range	-50...150°C [-60...300°F]
	Measuring current	<0.2 mA @ 25°C [77°F]
	Accuracy temperature	±0.26°C @ 25°C [±0.48°F @ 77°F]
	Time constant τ (63%) in water pipe	With thermowell A-22P-A.. and thermal contact fluid Typical 7 s with thermowell brass Typical 9 s with thermowell stainless steel
	Time constant τ (63%) in the air duct	Typical 210 s @ 0 m/s Typical 46 s @ 3 m/s
Safety data	Protection class IEC/EN	III, Protective Extra-Low Voltage (PELV)
	Power source UL	Class 2 Supply
	Degree of protection IEC/EN	IP65
	Degree of protection NEMA/UL	NEMA 4X
	EU Conformity	CE Marking
	Certification IEC/EN	IEC/EN 60730-1
	Quality Standard	ISO 9001
	UL Approval	cULus acc. to UL60730-1A/-2-9, CAN/CSA E60730-1/-2-9
	Type of action	Type 1
	Rated impulse voltage supply	0.8 kV
	Pollution degree	3
	Ambient humidity	Max. 95% RH, non-condensing
	Ambient temperature	-35...50°C [-30...120°F]
	Fluid temperature	-50...150°C [-60...300°F]

Technical data

Safety data	Housing surface temperature	Max. 90°C [195°F]
Materials	Housing	Cover: PC, orange Bottom: PC, orange Seal: NBR70, black UV resistant
	Cable gland	Plug Adapter: PA66, black Nut: PA6, black
	Probe material	V4A (1.4404)

Safety notes

This device has been designed for use in stationary heating, ventilation and air-conditioning systems and must not be used outside the specified field of application. Unauthorised modifications are prohibited. The product must not be used in relation with any equipment that in case of a failure may threaten humans, animals or assets.

Ensure all power is disconnected before installing. Do not connect to live/operating equipment.

Only authorised specialists may carry out installation. All applicable legal or institutional installation regulations must be complied with during installation.

The device contains electrical and electronic components and must not be disposed of as household refuse. All locally valid regulations and requirements must be observed.

Remarks

General remarks concerning sensors

Due to self-heating with 2 wire passive sensors, the supply wire current affects the measurement accuracy. So the supply current should not be higher than the measuring current values specified in this data sheet.

When using lengthy connecting cables (depending on the cross section used), the cable resistance must be taken into account. The lower the impedance of the sensor used, the greater the effect of the line resistance on the measurement, because it generates an offset.

Parts included

Description	Type
Mounting clip, with screws and adhesive foil	A-22D-A11

Accessories

Optional accessories

Description	Type
Mounting plate S housing	A-22D-A09
Connection adapter flex conduit, M20x1.5, for cable gland 1x 6 mm, Multipack 10 pcs.	A-22G-A01.1

Optional accessories air

Description	Type
Mounting flange for sensor probe 6 mm, up to max. 120°C [248°F], Plastic	A-22D-A03
Mounting flange for sensor probe 6 mm, up to max. 260°C, Brass	A-22D-A05

Recommended accessories water

Description	Type
Thermowell Stainless steel, 50 mm, G 1/2", SW27	A-22P-A06
Thermowell Brass, 50 mm, R 1/2", SW22	A-22P-A18
Thermal contact fluid	A-22P-A44
Compression fitting, Stainless steel, G 1/4" (external thread) for 6 mm, with cutting ring	A-22P-A45
Thermowell Stainless steel, 100 mm, G 1/2", SW27	A-22P-A08
Thermowell Brass, 100 mm, R 1/2", SW22	A-22P-A20
Cold barrier, Plastic, L 50 mm, for thermowell A-22P-A..	A-22P-A51
Adapter for Siemens thermowell	A-22P-A53
Thermowell Stainless steel, 150 mm, G 1/2", SW27	A-22P-A10
Thermowell Brass, 150 mm, R 1/2", SW22	A-22P-A22

Accessories

Description	Type
Thermowell Stainless steel, 200 mm, G 1/2", SW27	A-22P-A12
Thermowell Brass, 200 mm, R 1/2", SW22	A-22P-A24
Thermowell Stainless steel, 300 mm, G 1/2", SW27	A-22P-A14
Thermowell Brass, 300 mm, R 1/2", SW22	A-22P-A26
Thermowell Stainless steel, 250 mm, G 1/2", SW27	A-22P-A29
Thermowell Brass, 250 mm, R 1/2", SW22	A-22P-A30

Wiring diagram

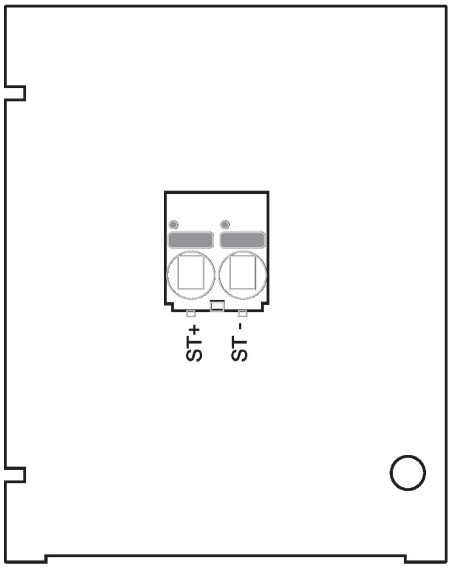

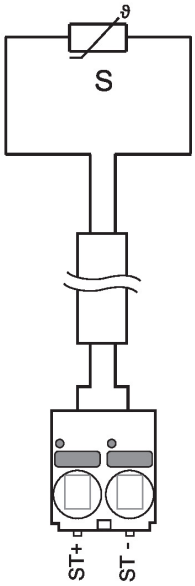

Dimensions

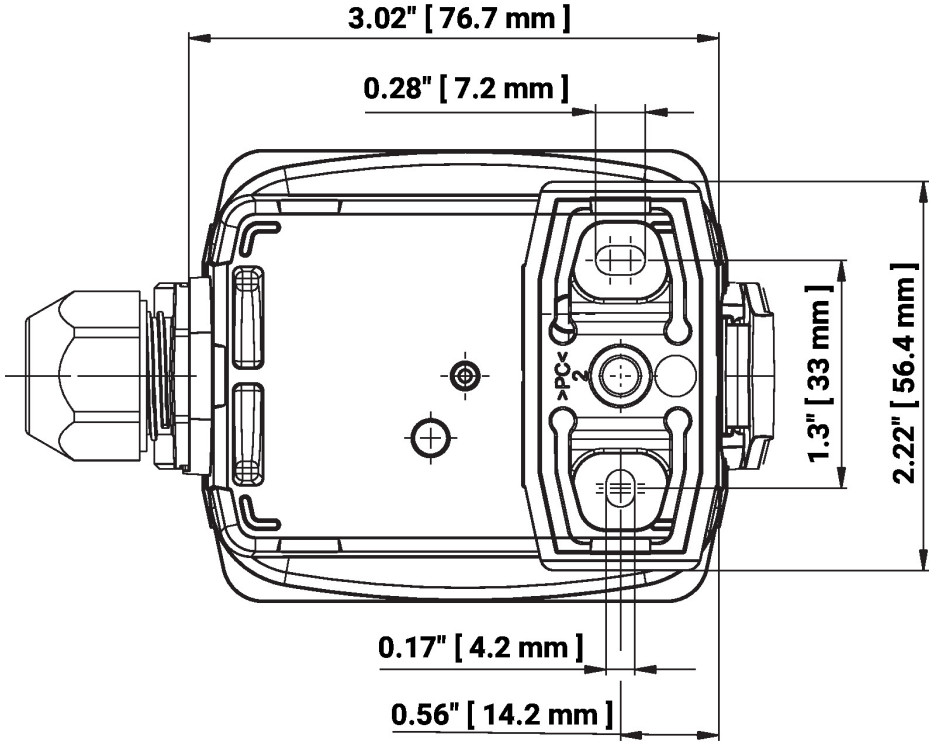

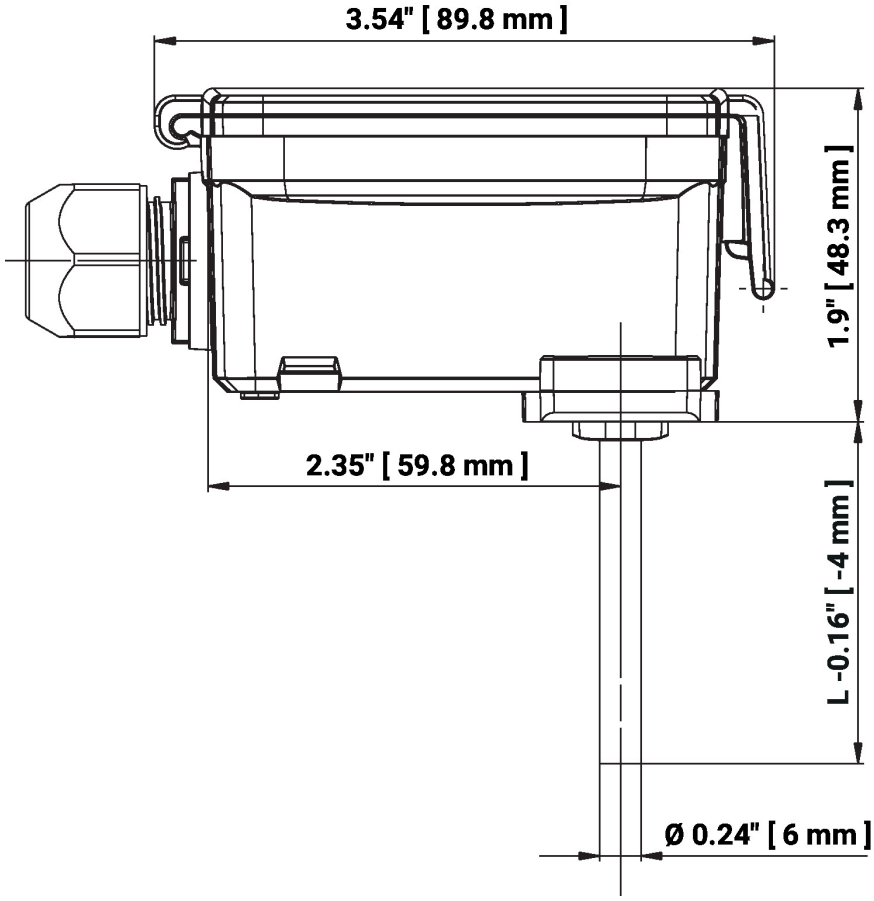

L = Probe length

Type	Probe length	Weight
01DT-1NH	50 mm	0.12 kg
01DT-1NL	100 mm	0.12 kg
01DT-1NN	150 mm	0.12 kg
01DT-1NP	200 mm	0.12 kg

Dimensions

Type	Probe length	Weight
01DT-1NR	300 mm	0.12 kg

Further documentation

- Installation instructions
- Resistance characteristics
- Sensor length calculator