71415-00001.I

1

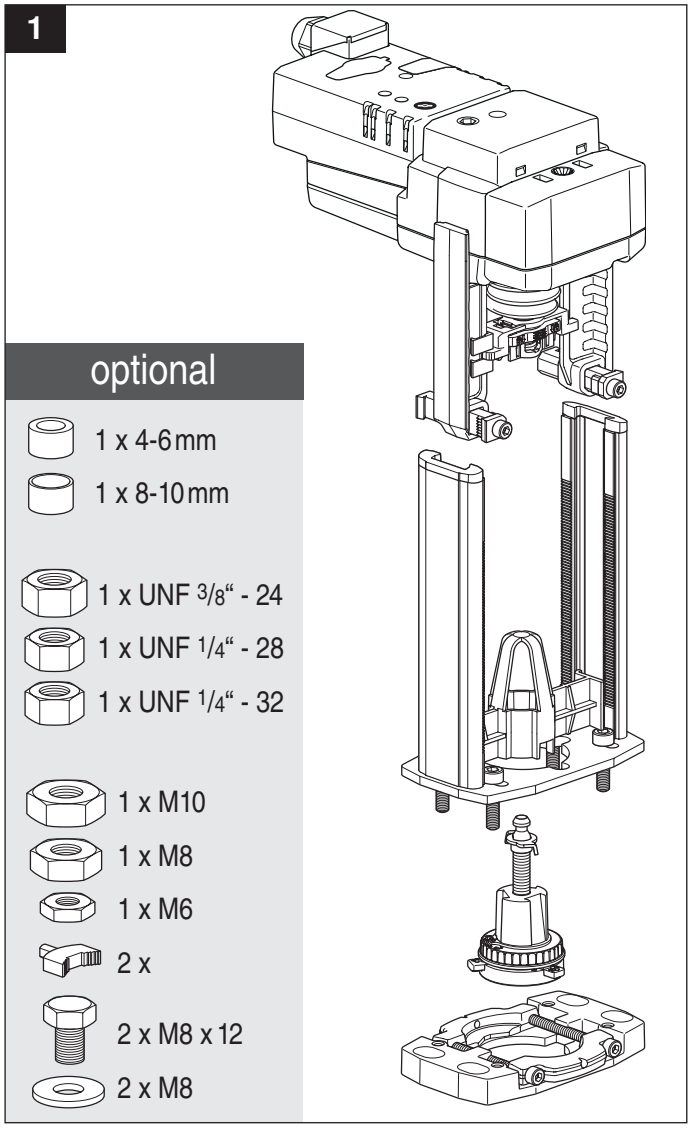

2

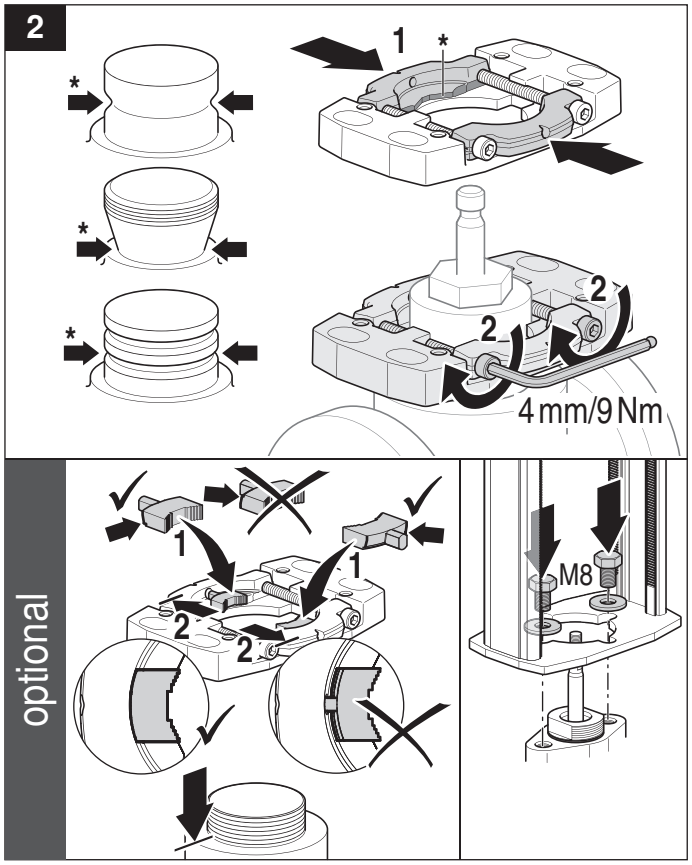

EXTRA	LDM	RV 102 E RV 103 E	ZNV-203
	Sauter	VUG / BUG VQD / BQD VQE / BQE	ZNV-204
	Danfoss	AB-QM (DN 40/100)	ZNV-205

3

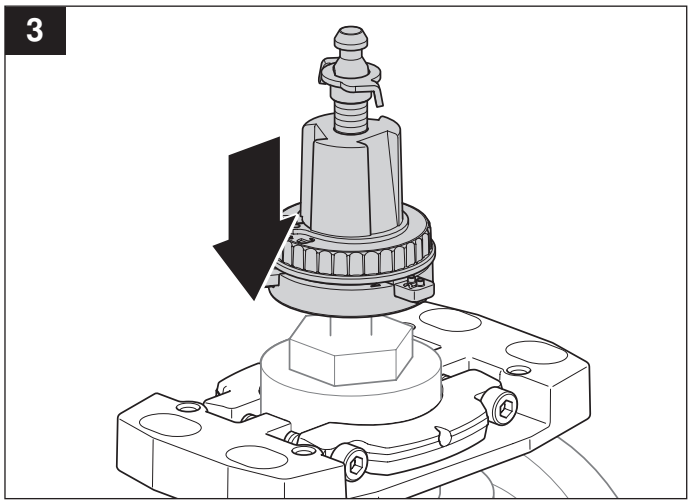

4

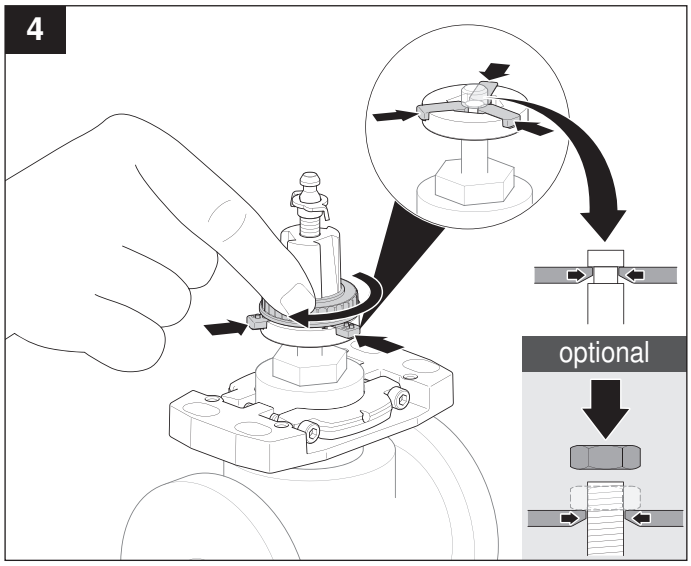

5

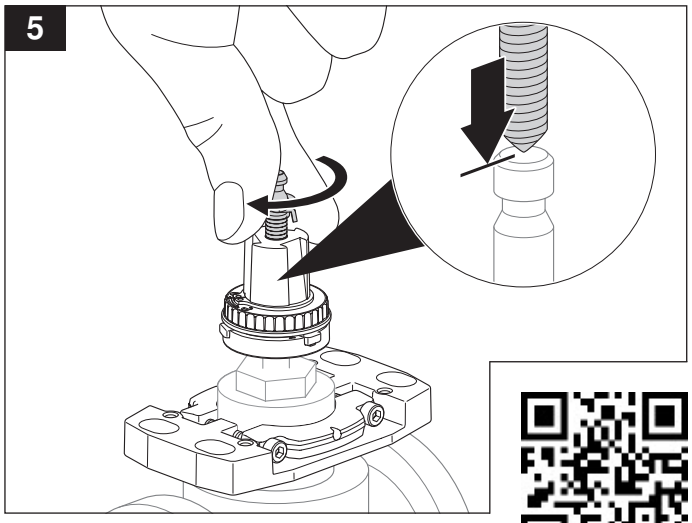

www.belimo.com/safety

6

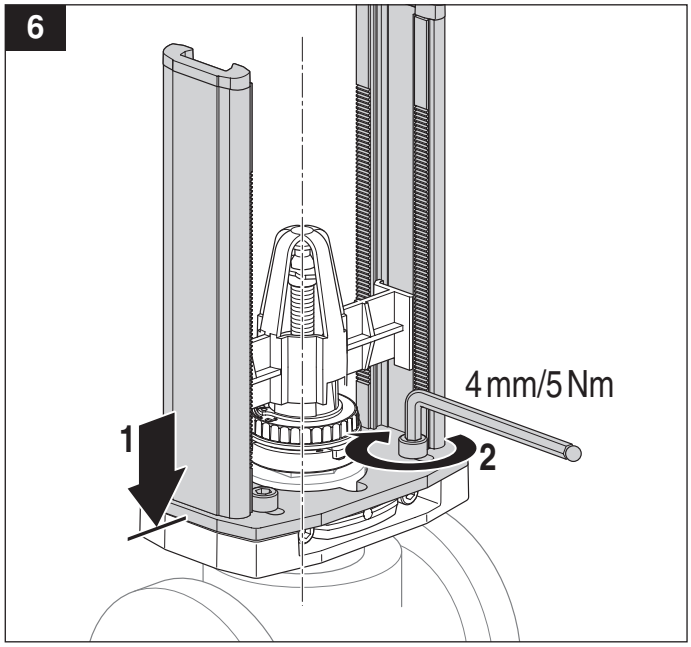
4 mm/5 Nm
1
2

7

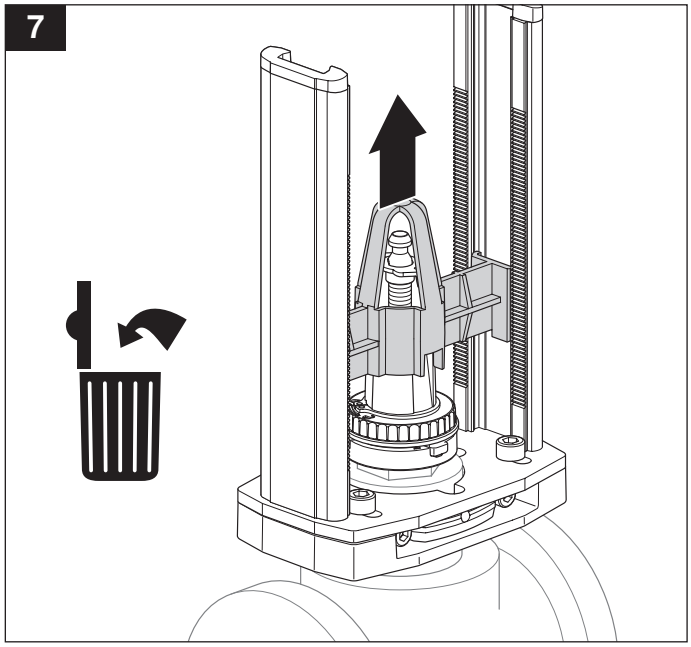

8

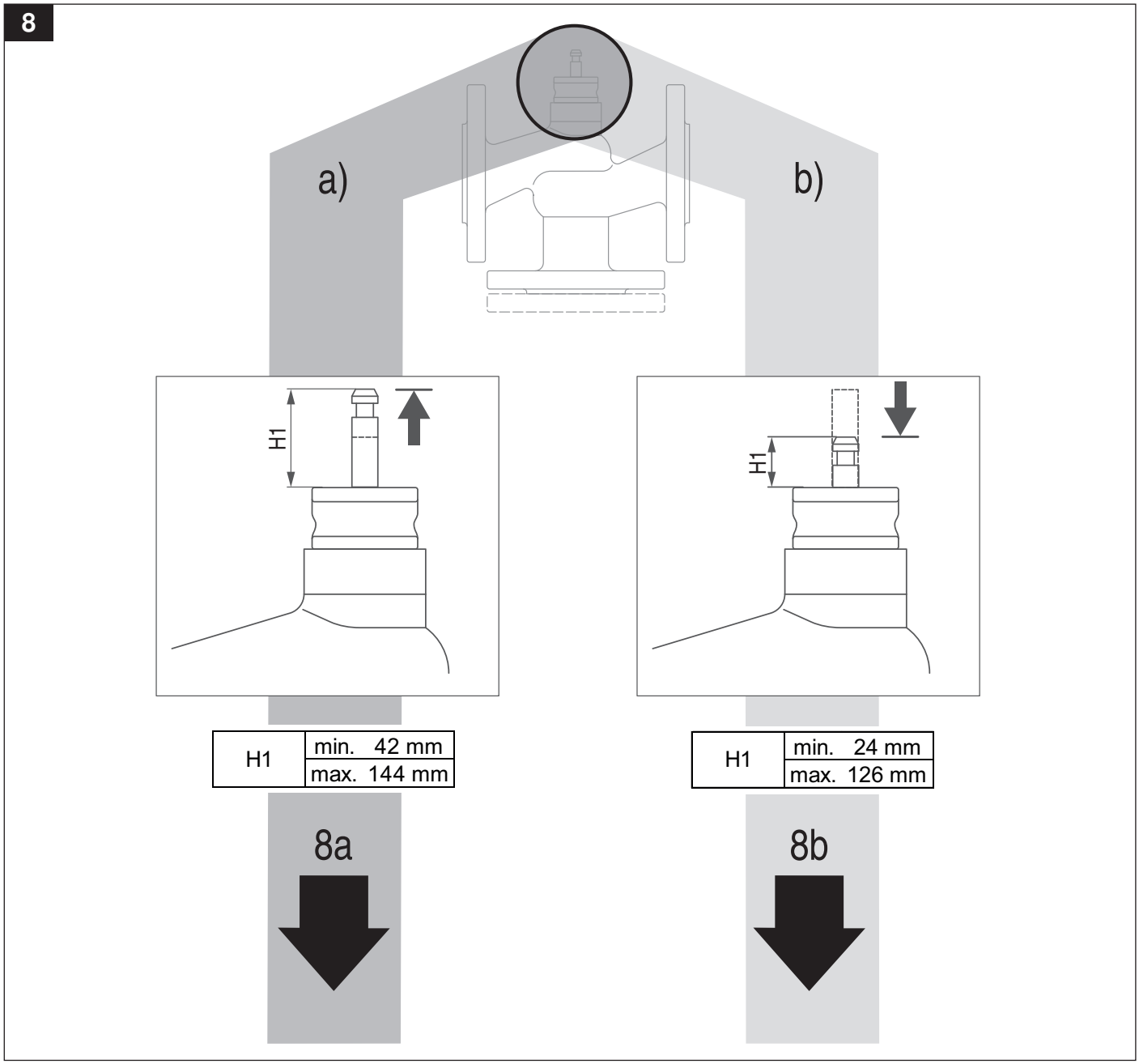
a)
b)
H1
H1
H1 | min. 42 mm / max. 144 mm
H1 | min. 24 mm / max. 126 mm
8a
8b

8a

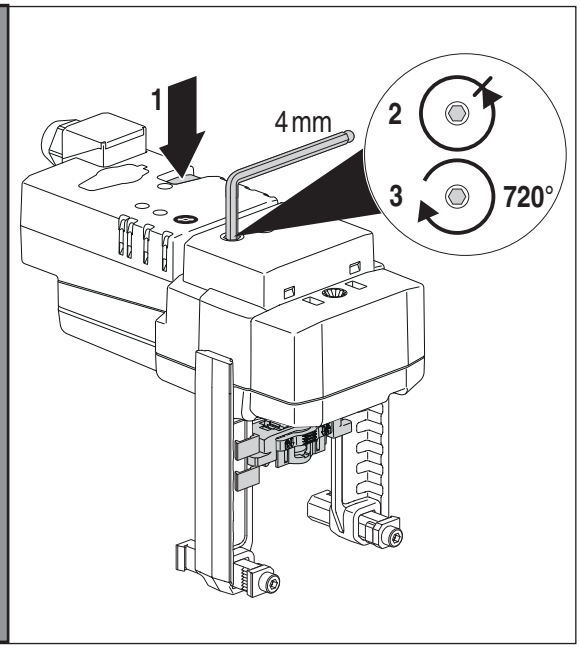

8b

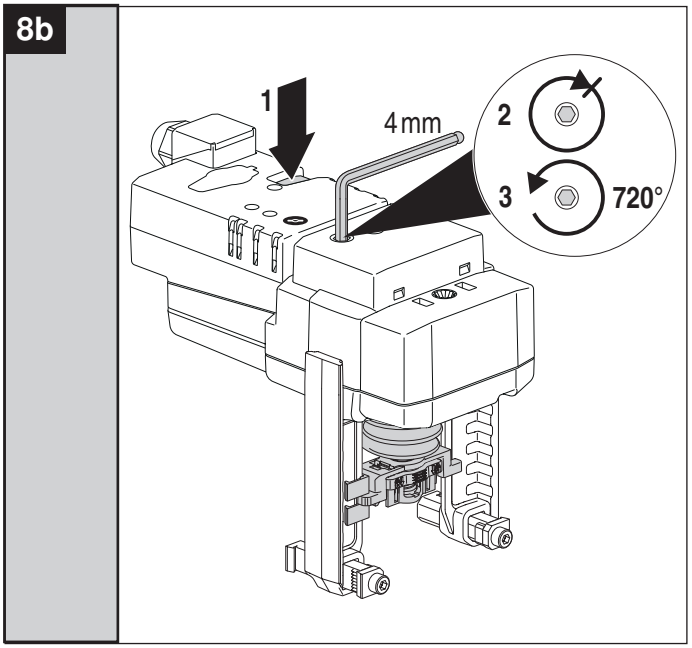

9a

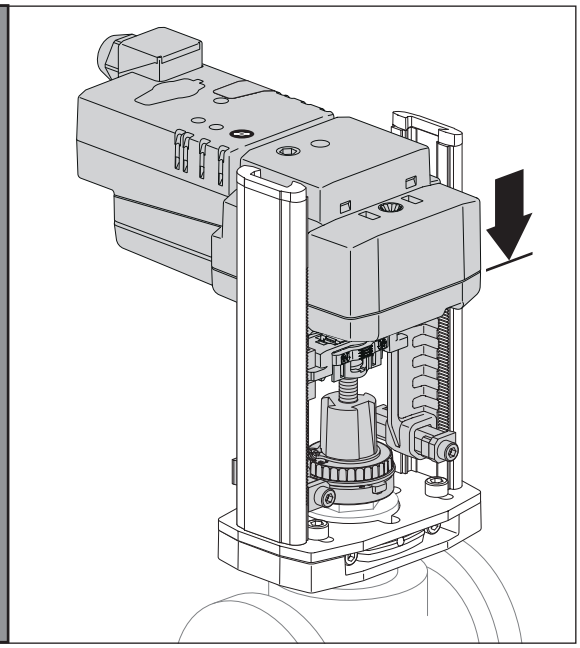

9b

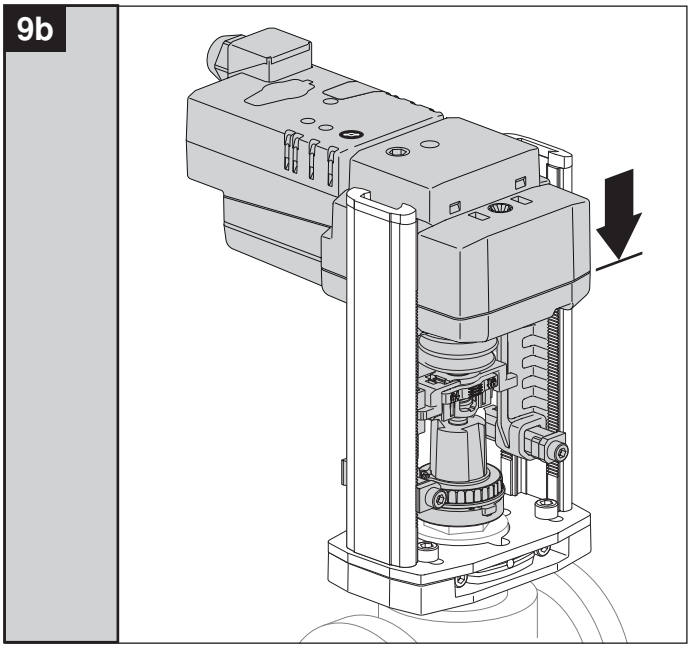

10a

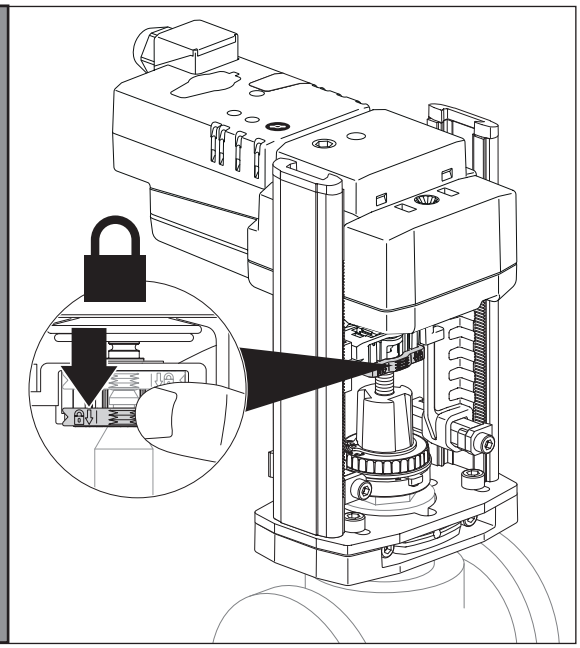

10b

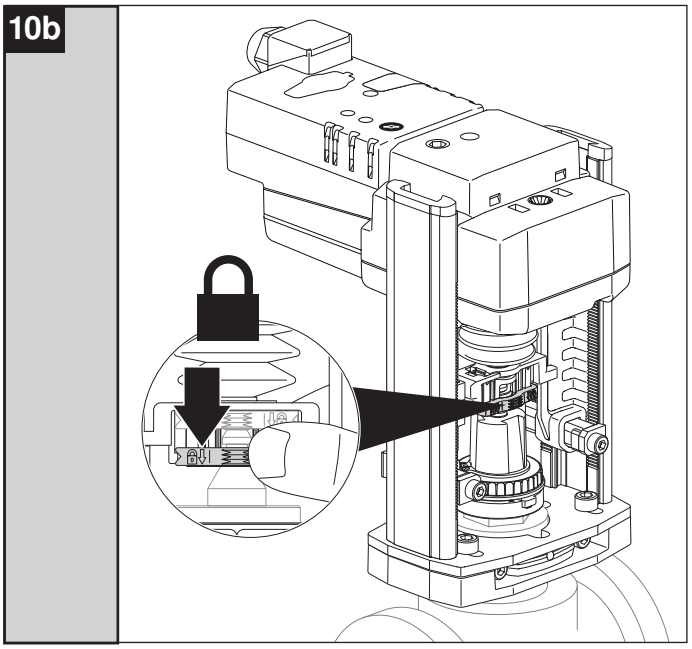

11a

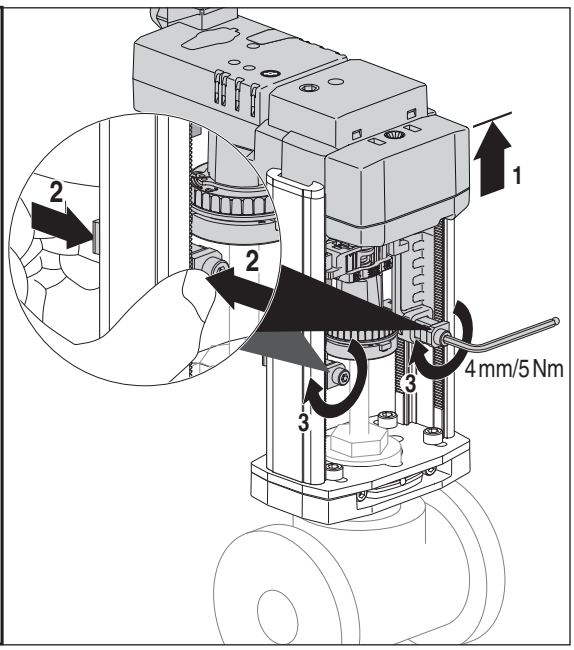
1
2
2
3
3
4 mm/5 Nm

11b

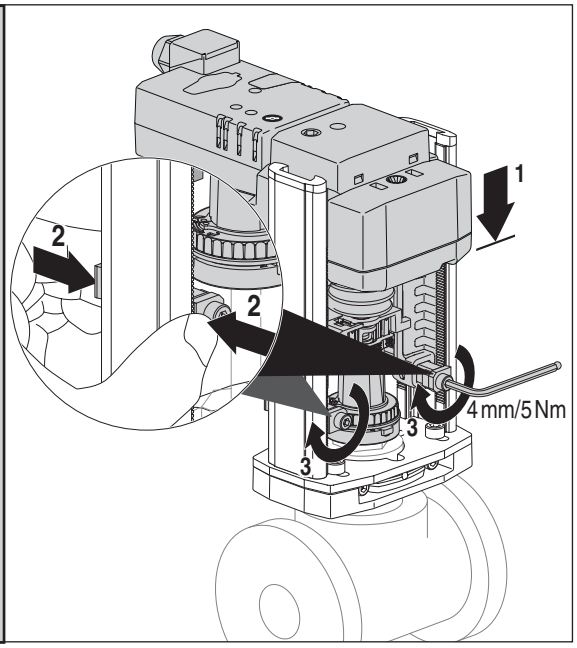
1
2
2
3
3
4 mm/5 Nm

12

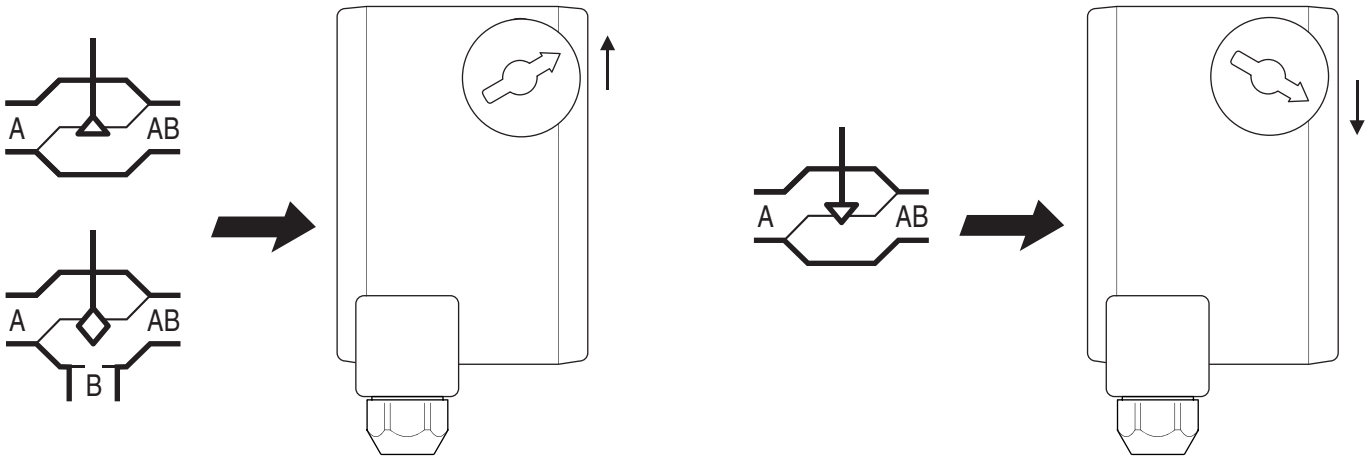
A
AB
A
AB
B
A
AB

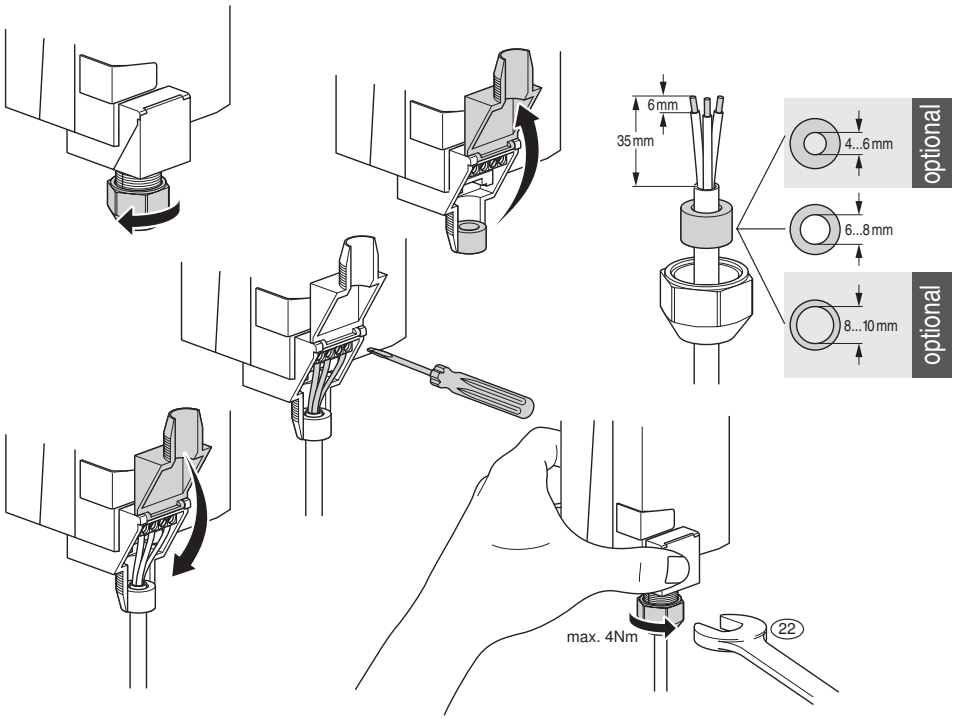
6 mm
35 mm
4...6 mm
optional
6...8 mm
8...10 mm
optional
max. 4Nm
22

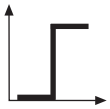

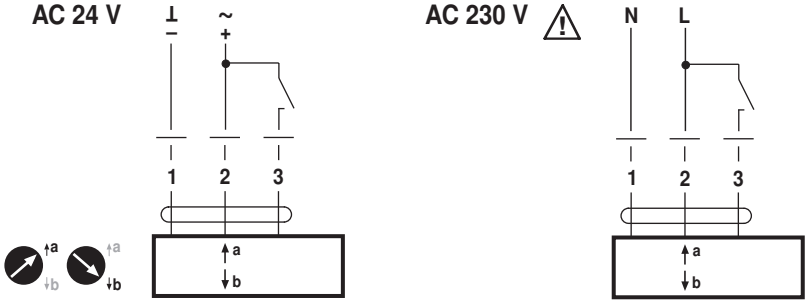

..V(C)24A-RE

..V(C)230A-RE

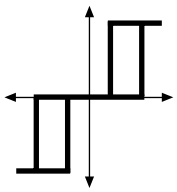

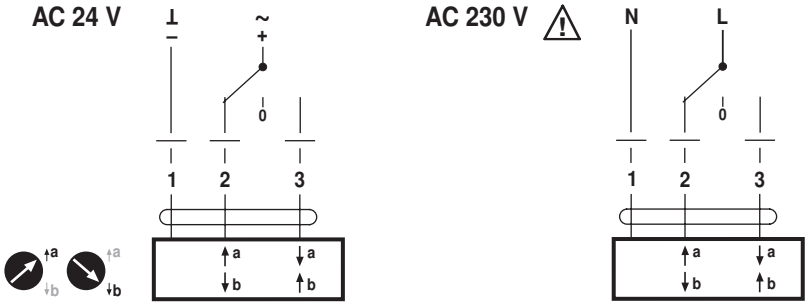

..V(C)24A-RE

..V(C)230A-RE

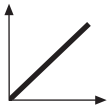

AC 24 V / DC 24 V

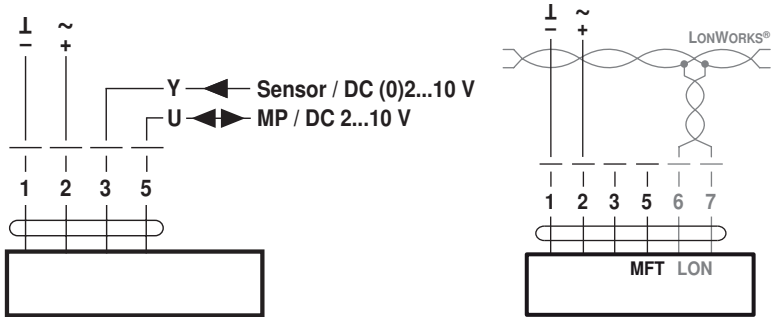

..V(C)24A-MP-RE

..V24ALON

BACnet MS/TP / Modbus RTU

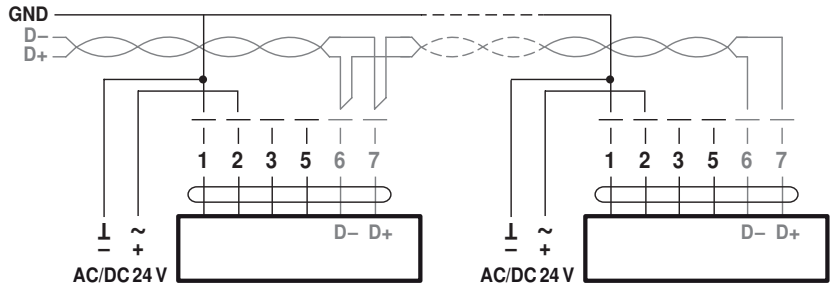

..V24A-MOD

..V24A-MOD

BACnet MS/TP / Modbus RTU

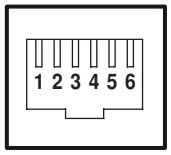

1 AC/DC 24 V
2 GND
3 D– (A)
4 D+ (B)
5 AC/DC 24 V
6 GND

..V24A-MOD-J6

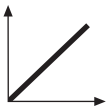

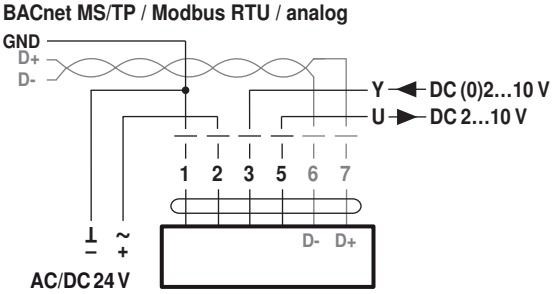

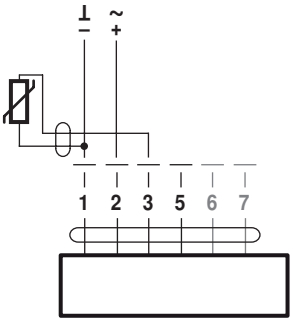
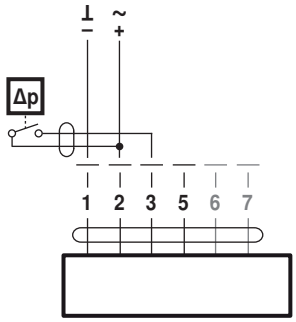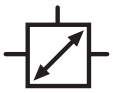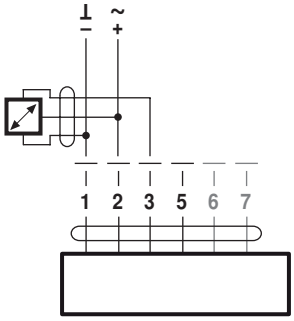
Ni1000	–28...+98°C	850...1600 Ω [2]
PT1000	–35...+155°C	850...1600 Ω [2]
NTC	–10...+160°C [1]	200 Ω...60 kΩ [2]