Rotary actuator for ball valves

- Torque motor 20 Nm
- Nominal voltage AC 100...240 V
- Control Open/close, 3-point
- with integrated auxiliary switch

Picture may differ from product

Technical data

Electrical data	Nominal voltage	AC 100...240 V
	Nominal voltage frequency	50/60 Hz
	Nominal voltage range	AC 85...265 V
	Power consumption in operation	3 W
	Power consumption in rest position	0.6 W
	Power consumption for wire sizing	7 VA
	Auxiliary switch	1x SPDT, 0...100%
	Switching capacity auxiliary switch	1 mA...3 A (0.5 A inductive), DC 5 V...AC 250 V
	Connection supply / control	Cable 1 m, 3x 0.75 mm^2
	Connection auxiliary switch	Cable 1 m, 3x 0.75 mm^2
	Parallel operation	Yes (note the performance data)
Functional data	Torque motor	20 Nm
	Manual override	with push-button, can be locked
	Running time motor	90 s / 90°
	Sound power level, motor	45 dB(A)
	Position indication	Mechanical, pluggable
Safety data	Protection class IEC/EN	II, reinforced insulation
	Protection class UL	II, reinforced insulation
	Protection class auxiliary switch IEC/EN	II, reinforced insulation
	Degree of protection IEC/EN	IP54
	Degree of protection NEMA/UL	NEMA 2
	Housing	UL Enclosure Type 2
	EMC	CE according to 2014/30/EU
	Low voltage directive	CE according to 2014/35/EU
	Certification IEC/EN	IEC/EN 60730-1 and IEC/EN 60730-2-14
	UL Approval	cULus according to UL60730-1A, UL60730-2-14 and CAN/CSA E60730-1 The UL marking on the actuator depends on the production site, the device is UL-compliant in any case
	Type of action	Type 1
	Rated impulse voltage supply / control	2.5 kV
	Rated impulse voltage auxiliary switch	2.5 kV
	Pollution degree	3
	Ambient humidity	Max. 95% RH, non-condensing
	Ambient temperature	-30...50°C [-22...122°F]
	Storage temperature	-40...80°C [-40...176°F]
	Servicing	maintenance-free

Technical data

Weight	Weight	0.94 kg

Safety notes

- This device has been designed for use in stationary heating, ventilation and air-conditioning systems and must not be used outside the specified field of application, especially in aircraft or in any other airborne means of transport.
- Outdoor application: Only possible if no (sea) water, snow, ice, sunlight or aggressive gases act directly on the device and if it is ensured that the ambient conditions remain within the limit values specified in the data sheet at all times.
- Caution: Mains voltage!
- Only authorised specialists may carry out installation. All applicable legal or institutional installation regulations must be complied with during installation.
- The switch for changing the direction of rotation may only be operated by authorised specialists. The direction of rotation must not in particular be reversed in a frost protection circuit.
- The device may only be opened at the manufacturer's site. It does not contain any parts that can be replaced or repaired by the user.
- Cables must not be removed from the device.
- The device contains electrical and electronic components and must not be disposed of as household refuse. All locally valid regulations and requirements must be observed.

Product features

Simple direct mounting
Straightforward direct mounting on the ball valve with only one central screw. The assembly tool is integrated in the plug-in position indicator. The mounting orientation in relation to the ball valve can be selected in 90° steps.

Manual override
Manual override with push-button possible (the gear train is disengaged for as long as the button is pressed or remains locked).

Adjustable angle of rotation
Adjustable angle of rotation with mechanical end stops.

High functional reliability
The actuator is overload protected, requires no limit switches and automatically stops when the end stop is reached.

Flexible signalling
With adjustable auxiliary switch (0...100%)

Auxiliary switch

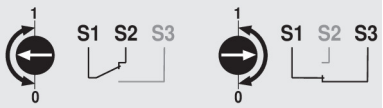

Accessories

Electrical accessories

Description	Type
Auxiliary switch 1x SPDT add-on	S1A
Auxiliary switch 2x SPDT add-on	S2A
Feedback potentiometer 140 Ω add-on	P140A
Feedback potentiometer 1 kΩ add-on	P1000A
Feedback potentiometer 10 kΩ add-on	P10000A

Electrical installation

Caution: Mains voltage!

Parallel connection of other actuators possible. Observe the performance data.

Direction of rotation switch is covered. Factory setting: Direction of rotation Y2.

Electrical installation

Wire colours:
1 = blue
2 = brown
3 = white
S1 = violet
S2 = red
S3 = white

AC 230 V, open/close

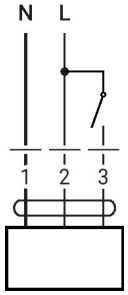

AC 230 V, 3-point

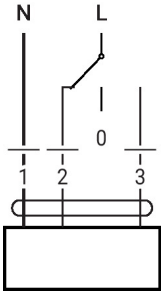

1	2	3	
L	L	–	A–AB = 0%
L	L	L	A–AB = 100%
L	–	–	stop
L	–	L	A–AB = 100%

Auxiliary switch

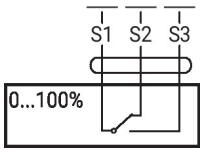

Operating controls and indicators

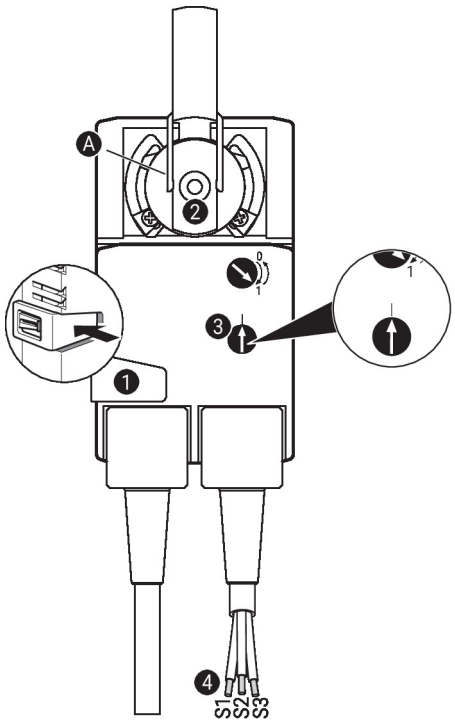

Auxiliary switch settings

Note: Perform settings on the actuator only in deenergised state.

For the auxiliary switch position settings, carry out points 1 to 4 successively.

1. **Manual override button**
   Holding button pressed down: Gear train disengages.
   Manual override is possible.
2. **Shaft clamp**
   Turn until edge line A displays the desired switching position of the actuator and release button 1.
3. **Auxiliary switch**
   Turn rotary knob until the arrow points to the vertical line.
4. **Cable**
   Connect continuity tester to S1 + S2 or to S1 + S3.
   If the auxiliary switch should switch in the opposite direction, rotate the auxiliary switch by 180°.

Dimensions

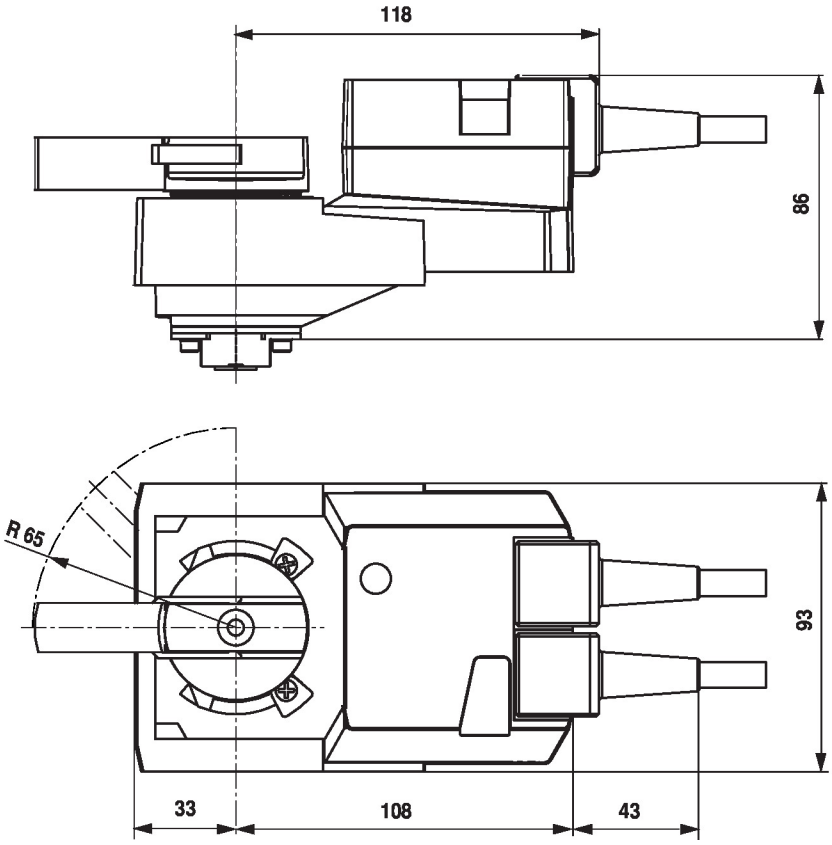

Further documentation

- The complete product range for water applications
- Data sheets for ball valves
- Installation instructions for actuators and/or ball valves
- General notes for project planning