Frost monitor with start-up function

For monitoring the temperatures of water/air heaters in ventilation and air-conditioning systems to prevent frost damage to the heating registers. Equipped with an active capillary tube, the frost monitors continuously signal the frost hazard with a signal output DC 0...10 V (start-up function) and via a 1-pole potential-free changeover.

Picture may differ from product

Type Overview

Type	Output signal active temperature	Output signal temperature switch	Additional features	Capillary
20DTS-1P3	0...10 V	Changeover	Auto or manual reset	2 m
20DTS-1P5	0...10 V	Changeover	Auto or manual reset	6 m

Technical data

Electrical data	Nominal voltage	AC 24 V
	Nominal voltage range	AC 19.2...26.4 V
	Power consumption AC	6.6 VA
	Electrical connection	Spring loaded terminal max. 2.5 mm²
	Cable entry	Cable gland with strain relief M16x1.5 mm, for cable ø5...10 mm
Functional data	Medium	Air
	Analogue output	Temperature sensor: 0...10 V (≙ 0...15°C) Valve control: 0...10 V (max. 1 mA)
	Output signal temperature switch note	Max. switching current 6(2) A @ AC 230 V / 6 A @ DC 24 V
	Switching reliability	Min. switching current 100 mA @ AC 12 V
	Analogue input	0...10 V (max. 1 mA)
	Display	LED, 2-digit segment display
	Display type	LED
	Display size	2-digit segment display
Measuring data	Measured values	Temperature
Specification temperature active	Measuring range	0...15°C [32...59°F] Default setting: 5°C [41°F]
	Adjustment range	1...10°C
	Switching differential	Typ. 2 K
	Long term stability	2 K according to DIN EN 14597
	Time constant τ (63%) in the air duct	Typical 90 s @ 0 m/s Typical 40 s @ 0.2 m/s
Safety data	Protection class IEC/EN	III, Safety Extra-Low Voltage (SELV)
	Degree of protection IEC/EN	IP42
	EMC	DIN EN 61326-1
	EU Conformity	CE Marking
	Quality Standard	ISO 9001
	Ambient humidity	Max. 85% RH, non-condensing
	Ambient temperature	-15...55°C [-5...130°F]

Technical data

Safety data	Fluid temperature	Up to max. 110°C
	Storage temperature	-25...65°C [-13...149°F]
Materials	Housing	Bottom: PA (RAL 7001, silver grey) Cover: PA, transparent Cover cap: ABS
	Cable gland	PA6, black
	Capillary	Copper

Safety notes

This device has been designed for use in stationary heating, ventilation and air-conditioning systems and must not be used outside the specified field of application. Unauthorised modifications are prohibited. The product must not be used in relation with any equipment that in case of a failure may threaten humans, animals or assets.

Ensure all power is disconnected before installing. Do not connect to live/operating equipment.

Only authorised specialists may carry out installation. All applicable legal or institutional installation regulations must be complied with during installation.

The device contains electrical and electronic components and must not be disposed of as household refuse. All locally valid regulations and requirements must be observed.

During installation, testing, servicing and troubleshooting of this product, it may be necessary to work with live electrical components. Have a qualified licensed electrician or other individual who has been properly trained in handling live electrical components perform these tasks. Failure to follow all electrical safety precautions when exposed to live electrical components could result in death or serious injury.

Product features

Operating mode

With the help of a vapor-filled capillary tube and diaphragm, the frost detector acquires the lowest temperature which occurs along at least 250 mm length of capillary tubing.

The 20DTS-1.. performs its task by providing 3 independent functions:

1. It opens the heating valve continuously within a proportional control range. (AOU2 DC 0...10 V, terminal 5)

2. It switches off the fans and closes the air dampers via its relay contact.

3. It makes the acquired temperature available for further handling. (AOU1 DC 0...10 V, terminal 2)

The measuring signal is then used as a frost signal by the frost detector and for valve control. The frost signal starts rising at about 6 K above the adjusted frost value.

Product features

Function chart of startup function

The frost signal is added to the valve control signal (terminal 4) fed to signal input Y. This causes the heating valve to travel to its fully open position – resulting from the control signal received via signal output AOU2 – before the output relay changes to the "Frost" position (terminal S2 - S3). This circuitry prevents frequent switching of the plant during the startup phase.

To make certain it is always the lowest temperature along the capillary tube that is acquired, the temperature of the diaphragm inside the housing must always be higher than the temperature at the capillary tube. This is ensured by a heating element inside the housing, which maintains the temperature at the diaphragm above 15 °C as long as the ambient temperature does not fall below -15 °C.

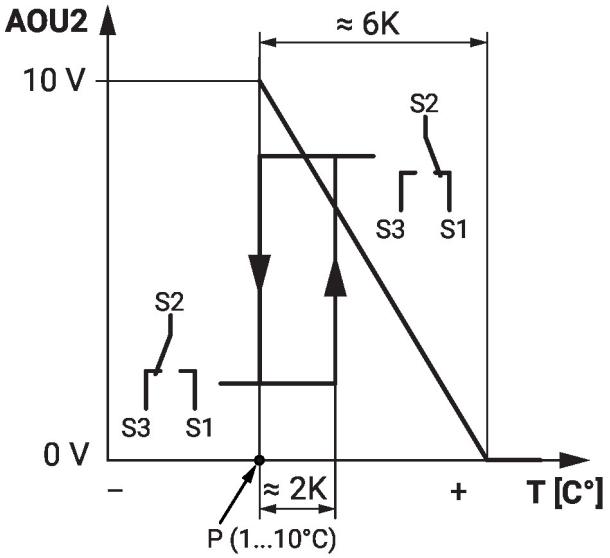

P	Switch point (frost), adjustable
T	Capillary tube temperature
AOU2	Valve control signal
S1, S2, S3	Relay output

Operating modes

Three operating modes can be selected:

Automatic operation 'Auto'

If, after shutdown due to frost, the capillary tube temperature rises (>2 K), the output relay will automatically return to its normal position.

Manual operation 'Manu'

If, after shutdown due to frost, the capillary tube temperature rises (>2 K), the output relay will return to its normal position only if either the inbuilt reset button is pressed or the power supply is cut off (e.g. via an external reset button).

Test mode 'Test'

In test mode, the output relay is forced to the "Frost" position. The valve control signal AOU2 (terminal 5) will not be affected. When returning to the switch position 'Manu', the frost position is maintained. It must be cancelled by pressing the reset button.

Product features

Functional check

Test mode

Pressing the button (3) or (4) for more than 2 seconds selects test mode. The display screen shows 'tE' alternating with the set switching point. The output relay switches to frost position (S2 - S3 closed).

The valve control signal AOU2 (terminal 5) is not affected.

Test mode is switched off by pressing button (3) or (4) for more than 2 seconds or by interrupting the voltage supply.

Checking the probe function

Set the switching point based on the current capillyary tube temperature.

If required: cool the function loop or another piece of the capillary tube (at least 250 mm long) to below the set switching point.

The relay contact must switch and the LED (1) must light up.

The measurement signal voltage can be measured at terminals 1 and 2 (see wiring diagram) (measuring range: DC 0...10 V ≙ 0...15°C).

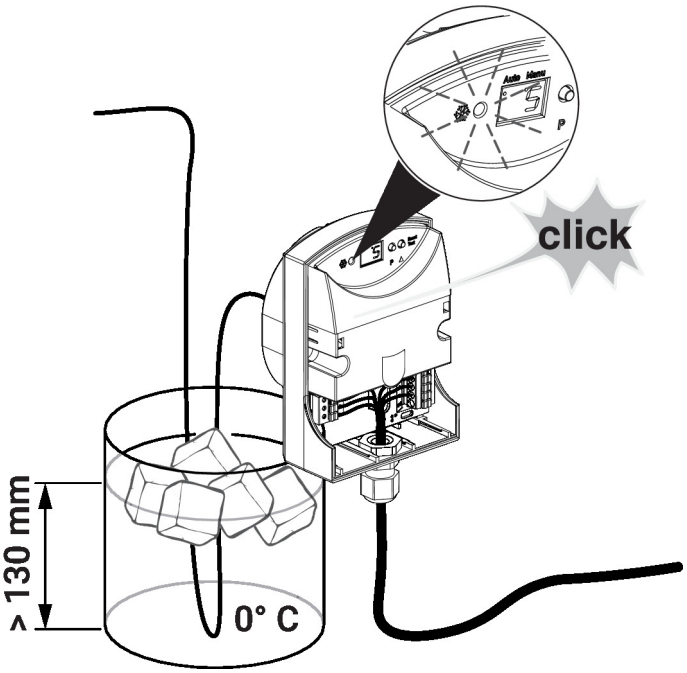

Unlocking in frost position

In 'Auto' operating mode, the frost monitor is automatically unlocked as soon as the temperature rises by approx. 2 K above the switching point.

In 'Manu' operating mode, the frost monitor is locked in the frost position. It can be unlocked by pressing the button (3), (4) or by interrupting the voltage supply.

Indicating a fault

If the frost monitor has stopped functioning due to a fracture in the capillary tube, the device switches to frost mode, the relay has also switched and the LED (1) lights up.

If the voltage supply is correct, the display flashes '- -'.

Operation

Operation

Settings are made via the two buttons ③ and ④.

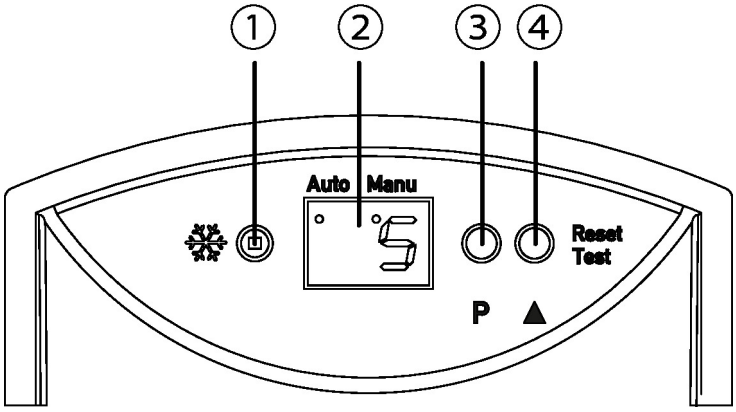

① LED red (danger of frost)
② Display screen for switching point (P) and operating mode
③ Parameter button
④ Value / Reset button

Setting switching point frost (Sp)

Adjustment switching point (Sp)

By pressing the button (3) (on display appears SP) once and then selecting the switching point frost using the button (4).

Values are rotational, automatic transfer of values after 2 seconds.

Setting operating mode (St)

Operating mode (St)

By pressing the button (3) twice and then selecting the operating mode using the button (4). Automatic unlocking 'At' (function as temperature monitor). Manual unlocking 'Hd' (fuction as temperature limiter).

Values are rotational, automatic transfer of values after 2 seconds.

Automatic unlocking

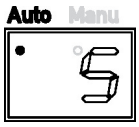

Manual unlocking

Parts included

Description	Type
Mounting kit, with 6 mounting brackets	A-22D-A08

Accessories

Optional accessories

Description	Type
Mounting flange for frost guard 20DTS-.., Plastic	A-22D-A12
Mounting kit, with 6 mounting brackets	A-22D-A08

Wiring diagram

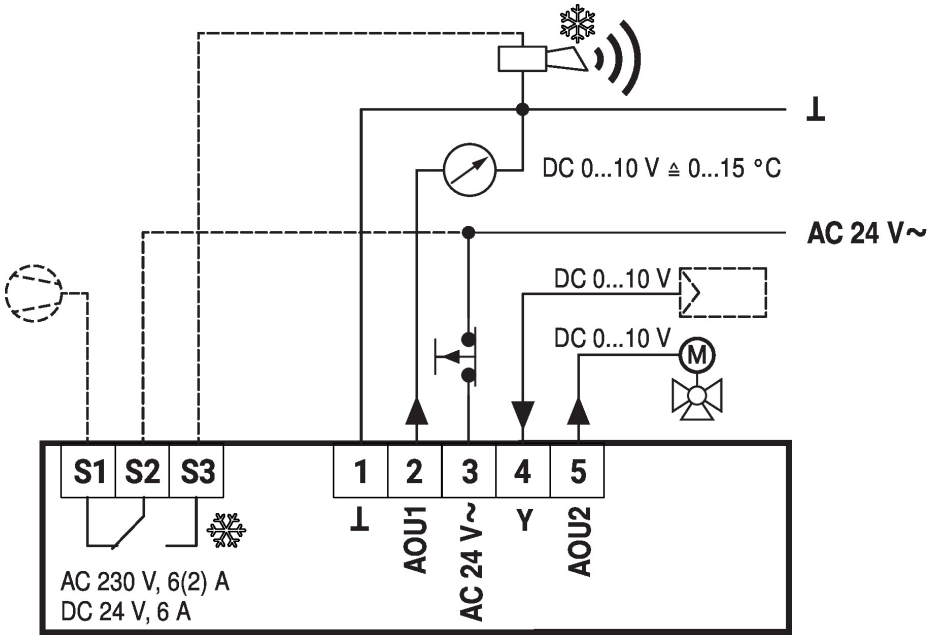

If the capillary leaks, the switch changes to the frost position.
Min. active length of capillary tube is 250 mm.
Permissible cable length at 1.5 mm² diameter is max. 300 m.

Dimensions

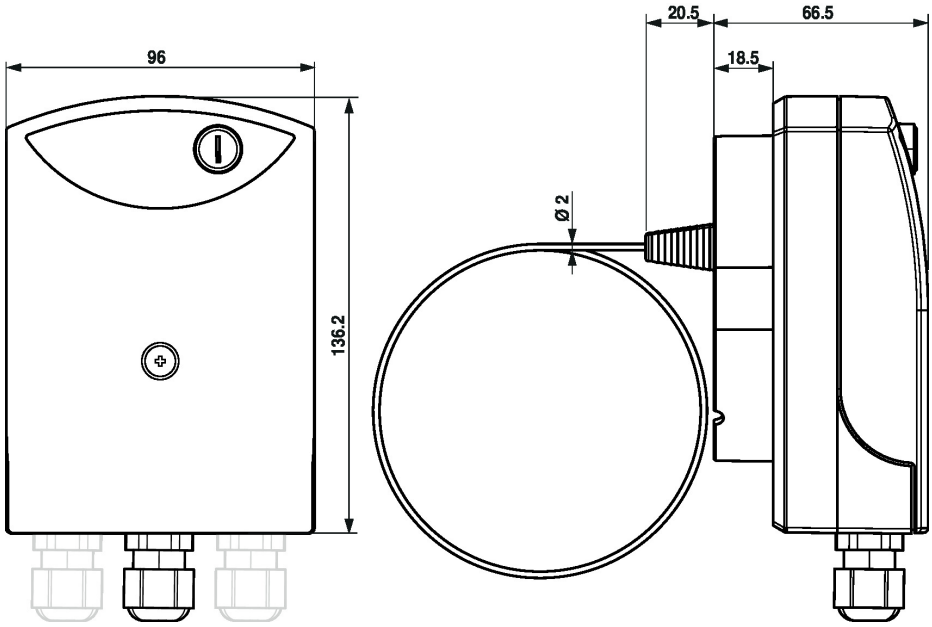

Type	Weight
20DTS-1P3	0.41 kg
20DTS-1P5	0.48 kg

Further documentation

- Installation instructions