Rotary actuator with fail-safe for ball valves

- Torque motor 2.5 Nm
- Nominal voltage AC/DC 24 V
- Control modulating, Open/close, 3-point, communicative via MP-Bus
- Running time motor 90 s (75...300 s)
- Deenergised open (NO)

Picture may differ from product

Technical data

Electrical data	Nominal voltage	AC/DC 24 V
	Nominal voltage frequency	50/60 Hz
	Nominal voltage range	AC 19.2...28.8 V / DC 21.6...28.8 V
	Power consumption in operation	1.3 W
	Power consumption in rest position	0.6 W
	Power consumption for wire sizing	2.6 VA
	Connection supply / control	Cable 1 m, 4x 0.75 mm^2
	Parallel operation	Yes (note the performance data)
Data bus communication	Communicative control	MP-Bus
	Number of nodes	MP-Bus max. 16
Functional data	Torque motor	2.5 Nm
	Torque fail-safe	2.5 Nm
	Operating range Y	2...10 V
	Input impedance	100 kΩ
	Operating range Y variable	Start point 0.5...30 V End point 2.5...32 V
	Operating modes optional	Open/close 3-point communicative
	Position feedback U	2...10 V
	Position feedback U note	Max. 1 mA
	Position feedback U variable	Start point 0.5...8 V End point 2.5...10 V
	Position accuracy	±5%
	Direction of motion motor	Y = 0 (0 V = A–AB = 0%)
	Direction of motion fail-safe	Deenergised NO, valve open (A–AB = 100%)
	Direction of motion note	for valves with L-bore (A–AB = 0%)
	Running time motor	90 s / 90°
	Running time motor variable	75...300 s
	Running time fail-safe	<25 s @ -20...50°C, <60 s @ -30°C
	Sound power level, motor	36 dB(A)
	Adaptation setting range	with Belimo Assistant 2
	Override control	MIN (minimum position) = 0% MID (intermediate position, AC only) = 50% MAX (maximum position) = 100%
	Override control variable	MIN = 0%...(MAX – 32%) MID = MIN...MAX MAX = (MIN + 32%)...100%
	Position indication	Mechanical

Technical data

Functional data	Service life	Min. 60'000 fail-safe positions
Safety data	Protection class IEC/EN	III, Safety Extra-Low Voltage (SELV)
	Degree of protection IEC/EN	IP42
	EMC	CE according to 2014/30/EU
	Certification IEC/EN	IEC/EN 60730-1 and IEC/EN 60730-2-14
	Type of action	Type 1.AA
	Rated impulse voltage supply / control	0.8 kV
	Pollution degree	3
	Ambient humidity	Max. 95% RH, non-condensing
	Ambient temperature	-30...50°C [-22...122°F]
	Storage temperature	-40...80°C [-40...176°F]
	Servicing	maintenance-free
Weight	Weight	0.56 kg

Safety notes

- This device has been designed for use in stationary heating, ventilation and air-conditioning systems and must not be used outside the specified field of application, especially in aircraft or in any other airborne means of transport.
- Outdoor application: Only possible if no (sea) water, snow, ice, sunlight or aggressive gases act directly on the device and if it is ensured that the ambient conditions remain within the limit values specified in the data sheet at all times.
- Only authorised specialists may carry out installation. All applicable legal or institutional installation regulations must be complied with during installation.
- The device may only be opened at the manufacturer's site. It does not contain any parts that can be replaced or repaired by the user.
- Cables must not be removed from the device.
- The device contains electrical and electronic components and must not be disposed of as household refuse. All locally valid regulations and requirements must be observed.

Product features

Operating mode

Conventional operation:

The actuator is connected with an analogue control signal Y (note the operating range). The actuator drives the valve to the operating position at the same time as tensioning the return spring. The valve is turned back to the fail-safe position by spring force when the supply voltage is interrupted.

Operation on Bus:

The actuator receives its digital control signal from the higher level controller via the MP-Bus and drives to the position defined. Connection U serves as communication interface and does not supply an analogue measuring voltage.

Converter for sensors

Connection option for an active sensor. The actuator serves as an analogue/digital converter for the transmission of the sensor signal via MP-Bus to the higher-level system.

Additional material may be required for the sensor connection. See "Electrical accessories".

Configurable device

The factory settings cover the most common applications. Single parameters can be modified via a wired connection using Belimo Assistant 2.

Simple direct mounting

Simple direct mounting on the ball valve with only one screw. The mounting orientation in relation to the ball valve can be selected in 90° steps.

High functional reliability

The actuator is overload protected, requires no limit switches and automatically stops when the end stop is reached.

Product features

Innovative motorisation

The actuator uses the powerful Belimo M600 microchip in combination with the INFORM method. It provides the full starting torque from a standstill with high precision (sensorless INFORM-Drive by Prof. Schrödl).

Adaptation

An adaptation can be triggered manually by switching the direction-of-rotation switch from the left to the right twice within 5 s or with Belimo Assistant 2. Both mechanical end stops are detected during the adaptation (entire setting range).

The actuator then moves into the position defined by the control signal.

A range of settings can be made using Belimo Assistant 2.

Accessories

Tools

Description	Type
Service tool for wired and wireless setup, on-site operation and troubleshooting.	Belimo Assistant 2
Belimo Assistant Link Bluetooth and USB to NFC and MP-Bus converter for configurable and communicative devices	LINK.10
Connecting cable 5 m, A: RJ11 6/4 LINK.10, B: free wire end for connection to MP/PP terminal	ZK2-GEN

Electrical accessories

Description	Type
Room temperature controller with 3 sequences	CR24-A3
Room temperature controller with 3 sequences	CR24-B3
Room temperature controller	CRK24-B1
MP-Bus power supply for MP actuators	ZN230-24MP

Electrical installation

Supply from isolating transformer.

Parallel connection of other actuators possible. Observe the performance data.

The cable cross-section (mm²) must be determined on the basis of the actuator performance data (VA, W), the cable resistance, the number of actuators, and the total cable length according to electrotechnical principles. High voltage drops across the installation cables can affect the function of the actuator if, for example, the nominal voltage range (AC/DC) is not respected.

High voltage drops across the control signal and position feedback lines (Y/U) with respect to ground affect the signal values (0.5/2...10 V) and can change the actuator position.

Wire colours:
1 = black
2 = red
3 = white
5 = orange

AC/DC 24 V, modulating

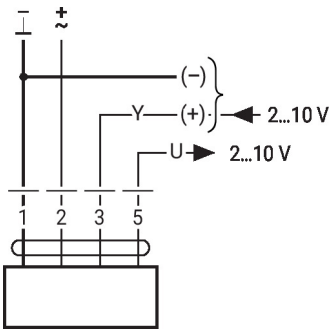

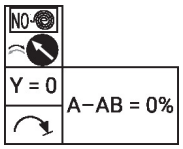

Control with 4...20 mA via external resistor

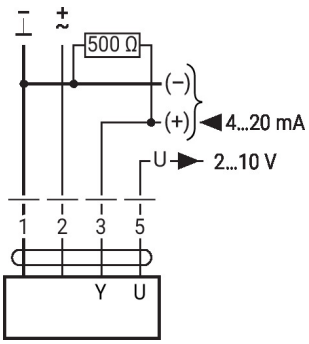

Caution:
The operating range must be set to DC 2...10 V.
The 500 Ohm resistor converts the 4...20 mA current signal to a voltage signal DC 2...10 V.

Further electrical installations

Functions with basic values (conventional mode)

Functional check

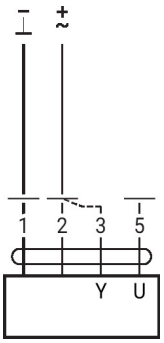

Procedure
1. Connect 24 V to connections 1 and 2
2. Disconnect connection 3:
– With direction of rotation 0: Actuator rotates to the left
– With direction of rotation 1: Actuator rotates to the right
3. Short-circuit connections 2 and 3:
– Actuator runs in opposite direction

MP-Bus

MP-Bus network topology

There are no restrictions regarding the network topology (bus, star, ring or mixed forms are permitted).
Supply and communication in one and the same 3-wire cable
• no shielding or twisting necessary
• no terminating resistors required

Connection on the MP-Bus

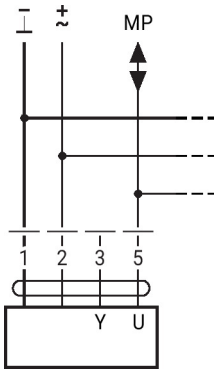

Max. 16 MP-Bus nodes

MP-Bus

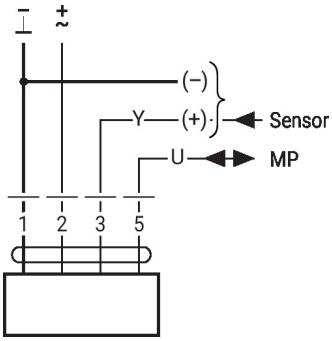

Connection of active sensors

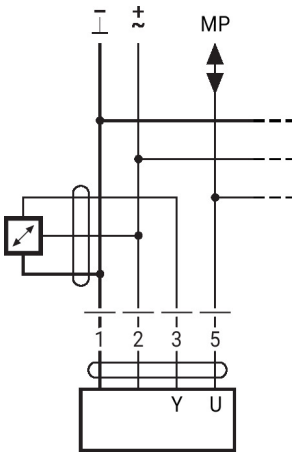

• Supply AC/DC 24 V
• Output signal 0...10 V (max. 0...32 V)
• Resolution 30 mV

Further electrical installations

Functions with specific parameters (configuration necessary)

Override control and limiting with AC 24 V with relay contacts

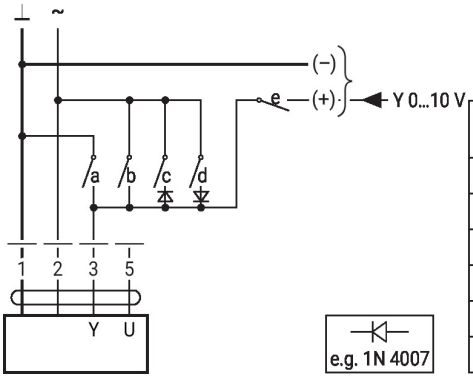

1	2	a	b	c	d	e	M	B
							Close	Close
							MIN	-
							MID	MID
							MAX	MAX
							Open	Open
							Y	Y

M = modulating
B = Bus

Control open/close

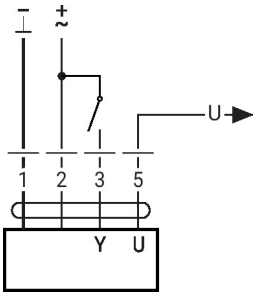

Control 3-point with AC 24 V

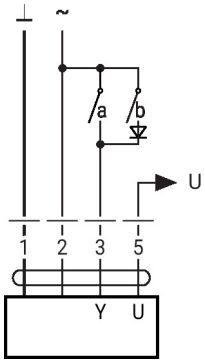

e.g. 1N 4007

1	2	3 (a)	3 (b)	NO-⊖	
					A–AB = 100%
					A–AB = 0%
				stop	
					A–AB = 0%

Override control and limiting with AC 24 V with rotary switch

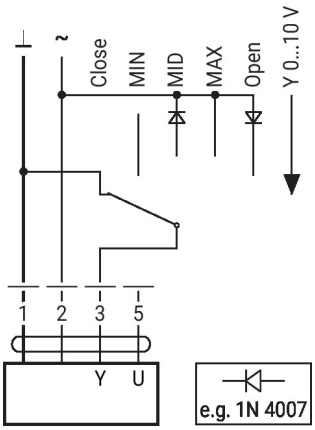

Caution:
The "Close" function is only guaranteed if the start point of the operating range is defined as min. 0.5 V.

Operating controls and indicators

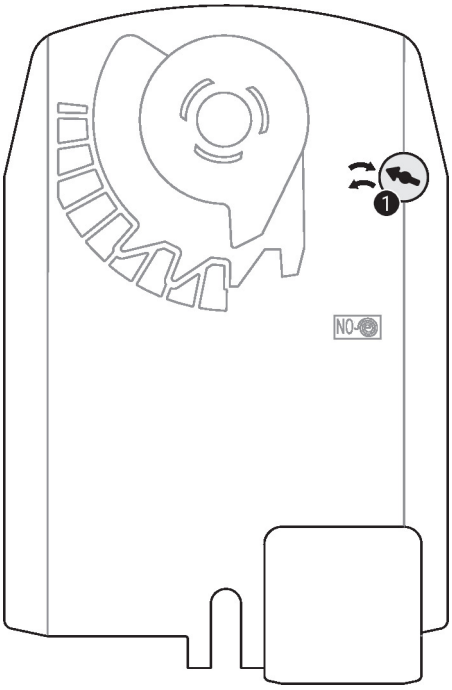

1 **MP addressing**
Move direction of rotation switch in opposite position and backwards (within 4 seconds)

Service

Using Belimo Assistant 2, device parameters can be modified. Belimo Assistant 2 can operate on a smartphone, tablet or PC. The available connection options vary depending on the hardware on which Belimo Assistant 2 is installed.

For more information about Belimo Assistant 2, refer to the Quick Guide – Belimo Assistant 2.

Wired connection

Belimo devices can be accessed by connecting Belimo Assistant Link to the USB port on a PC or laptop and to the service socket or MP-Bus wire on the device.

Belimo Assistant 2 acts as MP client. Therefore, no other MP client shall be connected to the device.

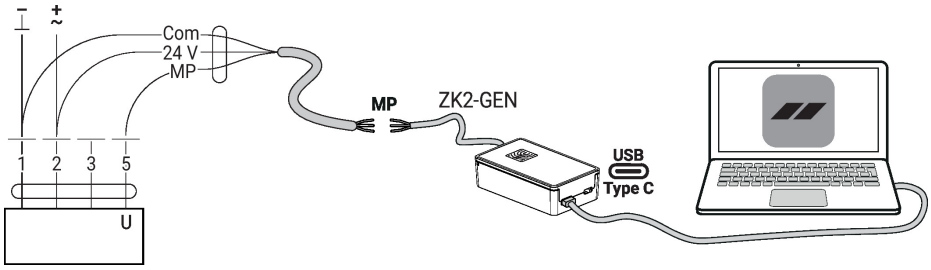

Dimensions

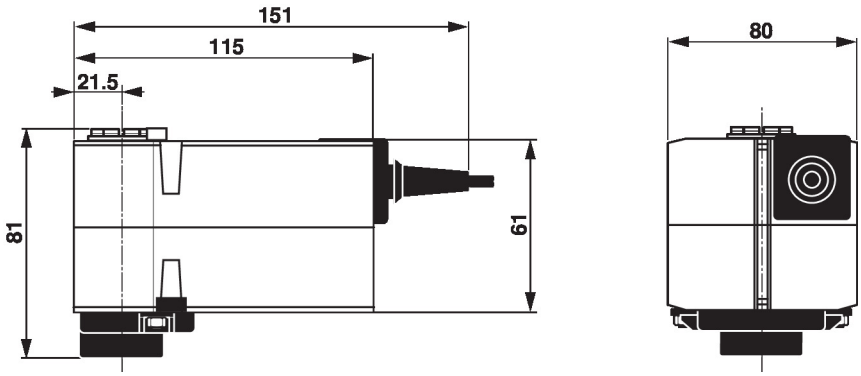

Further documentation

- The complete product range for water applications
- Data sheets for ball valves
- Installation instructions for actuators and/or ball valves
- General notes for project planning
- Description Data-Pool Values
- Introduction to MP-Bus Technology
- Overview MP Cooperation Partners
- Tool connections
- Quick Guide – Belimo Assistant 2