Rotary actuator for ball valves

- Torque motor 2 Nm
- Nominal voltage AC 100...240 V
- Control Open/close, 3-point

Picture may differ from product

Technical data

Electrical data	Nominal voltage	AC 100...240 V
	Nominal voltage frequency	50/60 Hz
	Nominal voltage range	AC 85...265 V
	Power consumption in operation	1.5 W
	Power consumption for wire sizing	2.5 VA
	Connection supply / control	Cable 1 m, 3x 0.75 mm^2
	Parallel operation	Yes (note the performance data)
Functional data	Torque motor	2 Nm
	Manual override	with hand crank
	Running time motor	35 s / 90°
	Sound power level, motor	45 dB(A)
	Position indication	Mechanical
Safety data	Protection class IEC/EN	II, reinforced insulation
	Degree of protection IEC/EN	IP40
	EMC	CE according to 2014/30/EU
	Low voltage directive	CE according to 2014/35/EU
	Certification IEC/EN	IEC/EN 60730-1 and IEC/EN 60730-2-14
	Type of action	Type 1
	Rated impulse voltage supply / control	4 kV
	Pollution degree	3
	Ambient humidity	Max. 95% RH, non-condensing
	Ambient temperature	-7...50°C [19...122°F]
	Storage temperature	-40...80°C [-40...176°F]
	Servicing	maintenance-free
Weight	Weight	0.26 kg

Safety notes

- This device has been designed for use in stationary heating, ventilation and air-conditioning systems and must not be used outside the specified field of application, especially in aircraft or in any other airborne means of transport.
- Outdoor application: only possible in case that no (sea) water, snow, ice, insolation or aggressive gases interfere directly with the device and that it is ensured that the ambient conditions remain within the thresholds according to the data sheet at any time.
- Caution: Mains voltage!
- Only authorised specialists may carry out installation. All applicable legal or institutional installation regulations must be complied with during installation.
- The actuator is to be protected against moisture. It is not suitable for outdoor applications.
- The correct functioning of the strain relief for the cable in the actuator housing is to be checked.
- The installer must check for correct principle of operation after installation.
- The device may only be opened at the manufacturer's site. It does not contain any parts that can be replaced or repaired by the user.
- The device contains electrical and electronic components and must not be disposed of as household refuse. All locally valid regulations and requirements must be observed.

Product features

Simple direct mounting

Simple direct mounting on the ball valve with only one screw. The mounting orientation in relation to the ball valve can be selected in 90° steps.

Manual override

Manual override possible with lever (the gearing is disengaged as long as the self-resetting lever is pressed).

Innovative motorisation

Continuous pulsating into the end stop with pulsating 3-point control results in damage to the actuator. Steps must be taken to ensure that pulsating 3-point controllers stop in the end position.

The actuator switches off for seven seconds in the case of blocking, then attempts to restart. If the blocked condition persists, the actuator attempts to restart once every two minutes a total of 15 times and subsequently only once every two hours.

Actuators for 3-point control in parallel operation must be synchronised once every week (by setting the controller signal to 0 or 100%) in order to guarantee position accuracy.

Pulse duration ≥0.5 s

Electrical installation

Caution: Mains voltage!

Parallel connection of other actuators possible. Observe the performance data.

Wire colours:
1 = blue
2 = brown
3 = white

Electrical installation

AC 230 V, open/close

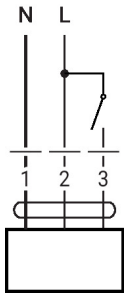

AC 230 V, 3-point

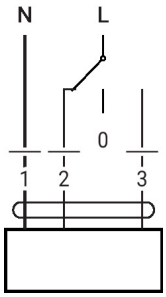

1	2	3	
L	L	_	A - AB = 0%
L	L	L	A - AB = 100%
L	_	_	stop
L	_	L	A - AB = 100%

Dimensions

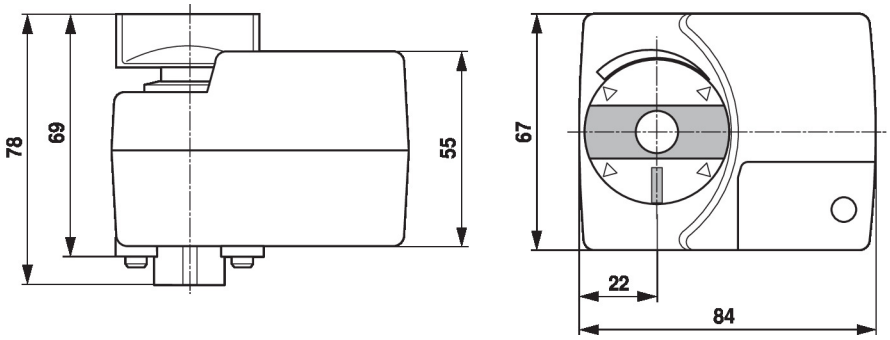

Further documentation

- The complete product range for water applications
- Data sheets for ball valves
- Installation instructions for actuators and/or ball valves
- General notes for project planning