T-piece PN 16

Picture may differ from product

Type overview

Type	DN	PN
ZD7100	100	16
ZD7125	125	16
ZD7150	150	16
ZD7200	200	16
ZD7250	250	16
ZD7300	300	16

Technical data

Functional data	Fluid	Water, water with glycol up to max. 50% vol.
	Fluid temperature	-20...120°C [-4...248°F]
	Pipe connection	Flange according to ISO 7005-2
Materials	Valve body	EN-GJS-400-18-LT (GGG 40.3)
	Body finish	matt black body finish

Safety notes

- This accessory has been designed for use in stationary heating, ventilation and air-conditioning systems and must not be used outside the specified field of application, especially in aircraft or in any other airborne means of transport.
- Only authorised specialists may carry out installation. All applicable legal or institutional installation regulations must be complied with during installation.
- The accessory may not be disposed of as household refuse. All locally valid regulations and requirements must be observed.

General notes

Delivery notes Mounting screws and washers for mounting the butterfly valves to the T-piece are included in the scope of delivery for ZD7..

Dimensions

Dimensional drawings

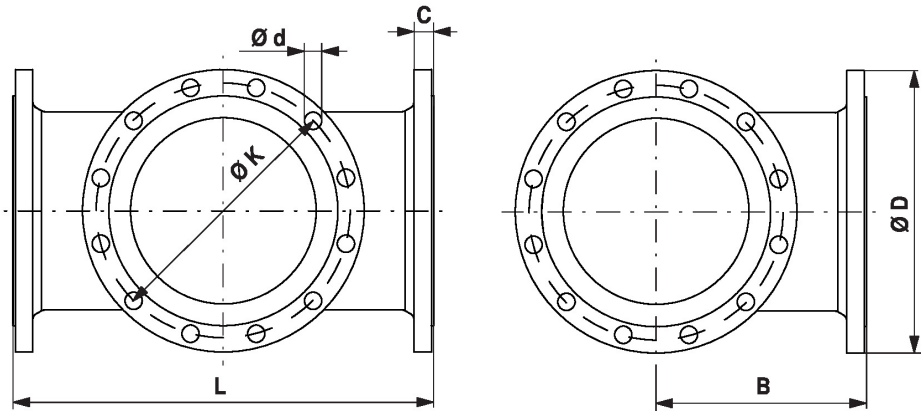

Type	DN	L [mm]	B [mm]	C [mm]	D [mm]	d [mm]	K [mm]	kg
ZD7100	100	360	180	21	220	8 x 19	180	23
ZD7125	125	400	200	23	250	8 x 19	210	32
ZD7150	150	440	220	26	285	8 x 23	240	38
ZD7200	200	520	260	30	340	12 x 23	295	59
ZD7250	250	600	300	32	400	12 x 28	355	84
ZD7300	300	680	340	32	455	12 x 28	410	109