Modulating rotary actuator with fail-safe for ball valves

- Torque motor 20 Nm
- Nominal voltage AC/DC 24 V
- Control modulating 0.5...10 V
- Position feedback 0.5...10 V
- Deenergised closed (NC)

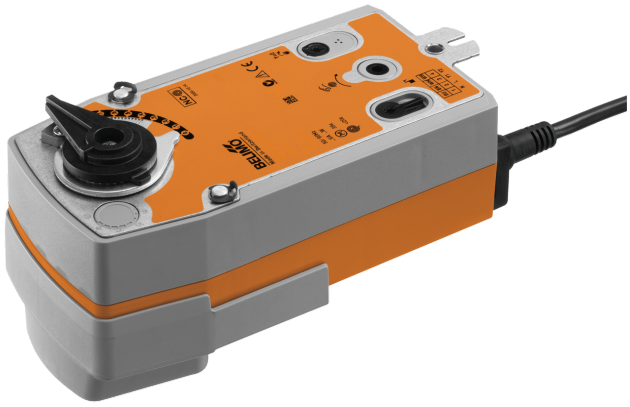

Picture may differ from product

Technical data

Electrical data	Nominal voltage	AC/DC 24 V
	Nominal voltage frequency	50/60 Hz
	Nominal voltage range	AC 19.2...28.8 V / DC 21.6...28.8 V
	Power consumption in operation	5.5 W
	Power consumption in rest position	3 W
	Power consumption for wire sizing	8.5 VA
	Connection supply / control	Cable 1 m, 4x 0.75 mm²
	Parallel operation	Yes (note the performance data)
Functional data	Torque motor	20 Nm
	Torque fail-safe	20 Nm
	Operating range Y	0.5...10 V
	Input impedance	100 kΩ
	Position feedback U	0.5...10 V
	Position feedback U note	Max. 0.5 mA
	Position accuracy	±5%
	Direction of motion motor	Y = 0 (0 V = A – AB = 0%)
	Direction of motion fail-safe	Deenergised NC, valve closed (A – AB = 0%)
	Direction of motion note	for valves with L-bore (A – AB = 100%)
	Manual override	by means of hand crank and locking switch
	Running time motor	90 s / 90°
	Running time fail-safe	<20 s @ -20...50°C, <60 s @ -30°C
	Sound power level, motor	45 dB(A)
	Position indication	Mechanical
	Service life	Min. 60'000 fail-safe positions
Safety data	Protection class IEC/EN	III, Safety Extra-Low Voltage (SELV)
	Power source UL	Class 2 Supply
	Degree of protection IEC/EN	IP54
	Degree of protection NEMA/UL	NEMA 2
	Housing	UL Enclosure Type 2
	EMC	CE according to 2014/30/EU
	Certification IEC/EN	IEC/EN 60730-1 and IEC/EN 60730-2-14

Technical data

Safety data	UL Approval	cULus according to UL60730-1A, UL60730-2-14 and CAN/CSA E60730-1 The UL marking on the actuator depends on the production site, the device is UL-compliant in any case
	Type of action	Type 1.AA
	Rated impulse voltage supply / control	0.8 kV
	Pollution degree	3
	Ambient humidity	Max. 95% RH, non-condensing
	Ambient temperature	-30...50°C [-22...122°F]
	Storage temperature	-40...80°C [-40...176°F]
	Servicing	maintenance-free
Weight	Weight	2.2 kg

Safety notes

- This device has been designed for use in stationary heating, ventilation and air-conditioning systems and must not be used outside the specified field of application, especially in aircraft or in any other airborne means of transport.
- Outdoor application: only possible in case that no (sea) water, snow, ice, insolation or aggressive gases interfere directly with the device and that it is ensured that the ambient conditions remain within the thresholds according to the data sheet at any time.
- Only authorised specialists may carry out installation. All applicable legal or institutional installation regulations must be complied with during installation.
- The device may only be opened at the manufacturer's site. It does not contain any parts that can be replaced or repaired by the user.
- Cables must not be removed from the device.
- The device contains electrical and electronic components and must not be disposed of as household refuse. All locally valid regulations and requirements must be observed.

Product features

Operating mode
The actuator is controlled with a control signal Y (note the operating range). The actuator moves the valve to the operating position at the same time as tensioning the return spring. The valve is turned back to the fail-safe position by spring force when the supply voltage is interrupted.

Simple direct mounting
Simple direct mounting on the ball valve with only one screw. The mounting orientation in relation to the ball valve can be selected in 90° steps.

Manual override
By using the hand crank the valve can be operated manually and engaged with the locking switch at any position. Unlocking is carried out manually or automatically by applying the operating voltage.

Adjustable angle of rotation
Adjustable angle of rotation with mechanical end stops.

High functional reliability
The actuator is overload protected, requires no limit switches and automatically stops when the end stop is reached.

Electrical installation

Supply from isolating transformer.
Parallel connection of other actuators possible. Observe the performance data.

Electrical installation

Wire colours:
1 = black
2 = red
3 = white
5 = orange

AC/DC 24 V, modulating

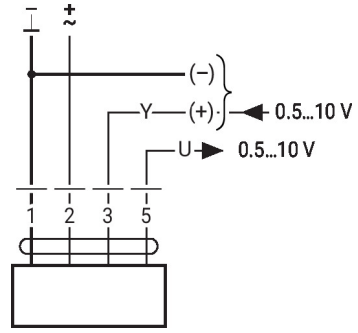

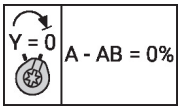

Dimensions

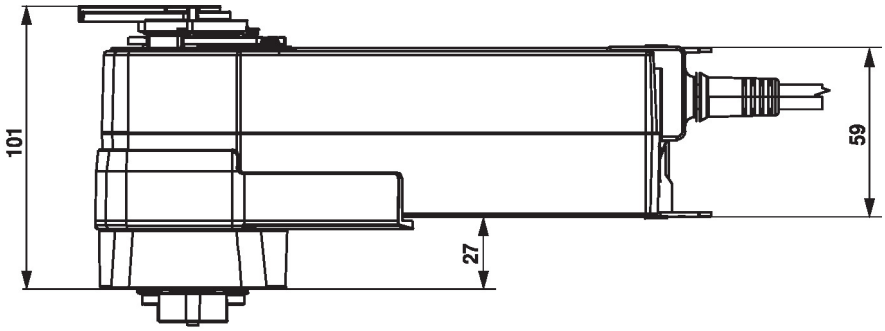

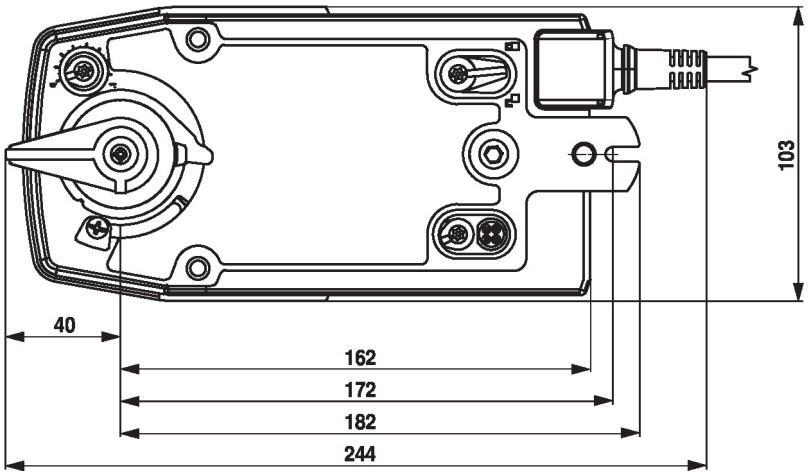

Further documentation

- The complete product range for water applications
- Data sheets for ball valves
- Installation instructions for actuators and/or ball valves
- General notes for project planning