Characterised control valve

- Suitable for safety class A2L refrigerants (ISO 817)
- Suitable for HFC and HFO refrigerants
- For refrigerant flow control
- Safety closing with SuperCap

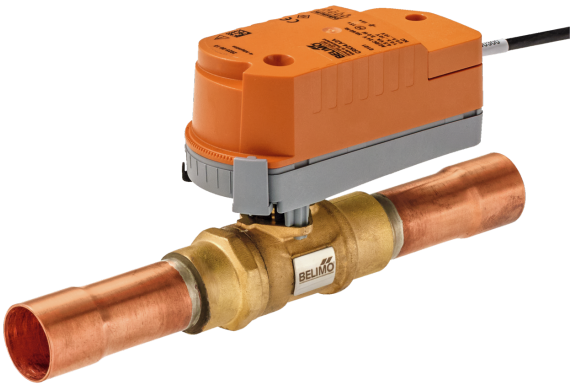

Picture may differ from product

Type Overview

Type	Kvs [m³/h]	ODF	PN
X8016M.11A2A	1.2	16-16 mm	50
X8016M.21A2A	4.8	16-16 mm	50
X8022M.32A2A	8	22-22 mm	50
X8028M.1AA2A	1.2	28-28 mm	50
X8028M.2AA2A	4.8	28-28 mm	50
X8035M.2AA2A	4.8	35-35 mm	50
X8042M.3BA2A	8	42-42 mm	50

Technical data

Electrical data	Nominal voltage	AC/DC 24 V
	Nominal voltage frequency	50/60 Hz
	Nominal voltage range	AC 19.2...28.8 V / DC 21.6...28.8 V
	Power consumption in operation	2.5 W
	Power consumption in rest position	0.5 W
	Power consumption for wire sizing	5 VA
	Connection supply / control	Cable 3 m, 4x 0.34 mm²
	Parallel operation	Yes (note the performance data)
Functional data	Operating range Y	0.5...10 V
	Input impedance	100 kΩ
	Position feedback U	0.5...10 V
	Running time motor	15 s / 90°
	Running time fail-safe	15 s / 90°
	Sound power level, fail-safe	35 dB(A)
	Fluid	HFC, HFO
	Fluid temperature	-20...70°C [-4...158°F]
	Fluid temperature note	with ZCQ-E 70...120°C [158...248°F]
	Differential pressure Δpmax	3500 kPa
	Flow characteristic	equal percentage (VDI/VDE 2173)
	Flow setting	See installation instruction
	Leakage rate	air-bubble tight, leakage rate A (EN 12266-1)
	Angle of rotation note	Adjustable Operating range 15...90°
	Pipe connection	Internal soldering sleeve ODF
	Installation orientation	upright to horizontal (in relation to the spindle)
	Servicing	maintenance-free
	Manual override	with actuator (clicked out)

Technical data

Safety data	Protection class IEC/EN	III, Safety Extra-Low Voltage (SELV)
	Degree of protection IEC/EN	IP40
	EMC	CE according to 2014/30/EU
	Certification IEC/EN	IEC/EN 60730-1 and IEC/EN 60730-2-14
	Type of action	Type 1.AA
	Rated impulse voltage supply / control	0.8 kV
	Pollution degree	2
	Compatible refrigerants	R1234ze, R134a, R404A, R407C, R407H, R410A, R417A, R427A, R448A, R449A, R450A, R507A, R452A, R513A, R1234yf, R32, R452B, R454A, R454B, R454C, R455A
	Flammable refrigerants	The product is not to be considered a source of ignition when used together with A2L classified refrigerants and is compliant with clauses 22.116 and 22.117 from IEC 60335-2-40. Compliance with clause 22.117 has been checked by measuring the appropriate surface temperatures during the tests of IEC 60335-2-40, clauses 11.
	Ambient humidity	Max. 95% RH, non-condensing
	Ambient temperature	-30...50°C [-22...122°F]
	Ambient temperature note	Without radiation
	Storage temperature	-40...80°C [-40...176°F]
Materials	Valve body	Brass CW617N
	Closing element	Stainless steel AISI 316L
	Spindle	Stainless steel AISI 316L or chrome-plated brass
	Spindle seal	HNBR O-ring
Terms	Abbreviations	POP = Power off position / fail-safe position PF = Power fail delay time / bridging time

Safety notes

- This device has been designed for use in refrigeration application, stationary heating, ventilation and air conditioning systems and must not be used outside the specified field of application, especially in aircraft, any other airborne means of transport or explosive atmosphere.
- Outdoor application: Only possible if no (sea) water, snow, ice, sunlight or aggressive gases act directly on the device and if it is ensured that the ambient conditions remain within the limit values specified in the data sheet at all times.
- Only authorised specialists may carry out installation. All applicable legal or institutional installation regulations must be complied with during installation.
- The device may only be opened at the manufacturer's site. It does not contain any parts that can be replaced or repaired by the user.
- Cables must not be removed from the device.
- The device contains electrical and electronic components and must not be disposed of as household refuse. All locally valid regulations and requirements must be observed.
- The valve has been designed for use in stationary electrical heat pumps, air-conditioning systems and dehumidifiers and must not be used outside the specified field of application, especially in aircraft or in any other airborne means of transport.
- The suitability of these products for applications in which flammable refrigerants are used must be checked by the user for each individual application. Any application is the sole responsibility of the user.
- The valve does not contain any parts that can be replaced or repaired by the user.
- The valve may not be disposed of as household refuse. All locally valid regulations and requirements must be observed.

Product features

Operating mode

The ball valve is adjusted by a rotary actuator.

The ball valve is opened in a counterclockwise direction and closed in a clockwise direction.

Pre-charging time (start up)

The capacitor actuators require a pre-charging time. This time is used for charging the capacitors up to a usable voltage level. This ensures that, in the event of a power failure, the actuator can move at any time from its current position into the fail-safe position. The duration of the pre-charging time depends mainly on how long the power was interrupted.

Typical pre-charging time

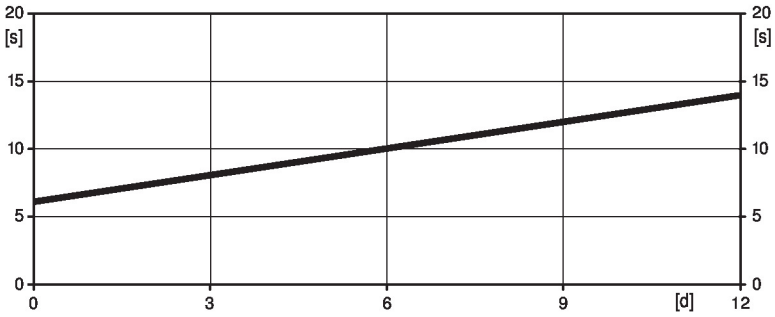

[d] = Power failure in days
[s] = Pre-charging time in seconds

	[d]				
	0	3	6	9	12
[s]	6	8	10	12	14

Delivery condition (capacitors)

The actuator is completely discharged after delivery from the factory, which is why the actuator requires approximately 25 s pre-charging time before initial commissioning in order to bring the capacitors up to the required voltage level.

Electrical installation

Supply from isolating transformer.

Parallel connection of other actuators possible. Observe the performance data.

Wire colours:
1 = black
2 = red
3 = white
5 = orange

AC/DC 24 V, modulating

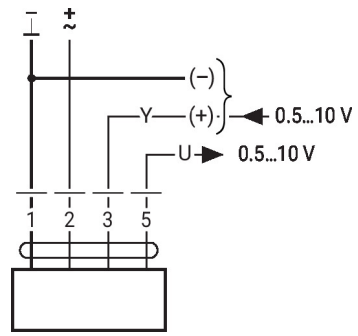

Operating controls and indicators

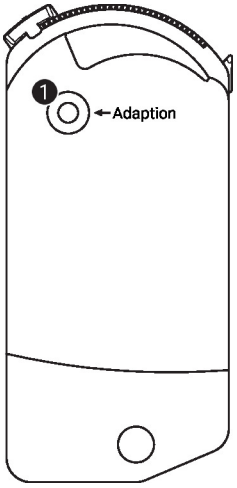

1 Push-button

Press button: Triggers angle of rotation adaptation, followed by standard mode

Installation notes

Permissible installation orientation

The ball valve can be installed upright to horizontal. The ball valve may not be installed in a hanging position, i.e. with the spindle pointing downwards.

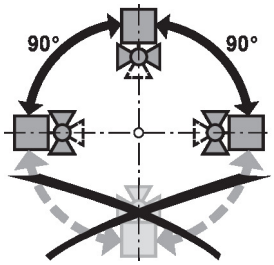

Servicing

Ball valves and rotary actuators are maintenance-free.

Before any service work on the control element is carried out, it is essential to isolate the rotary actuator from the power supply (by unplugging the electrical cable if necessary). The operating conditions of the refrigerant circuit and its components must be observed.

Flow direction

Direction of flow in both directions possible.

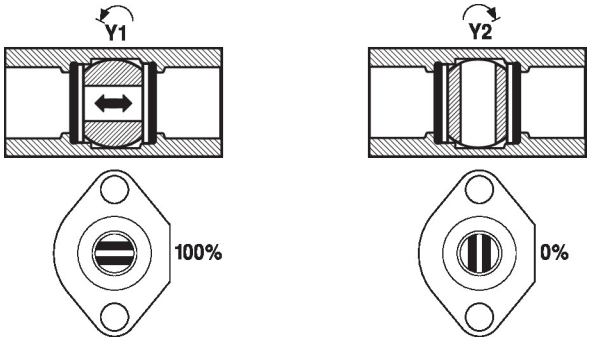

General notes

Valve selection

The Bereva sizing software is going to be updated with these valve models. In the meantime, the Bereva support team is available to help size them.

Dimensions

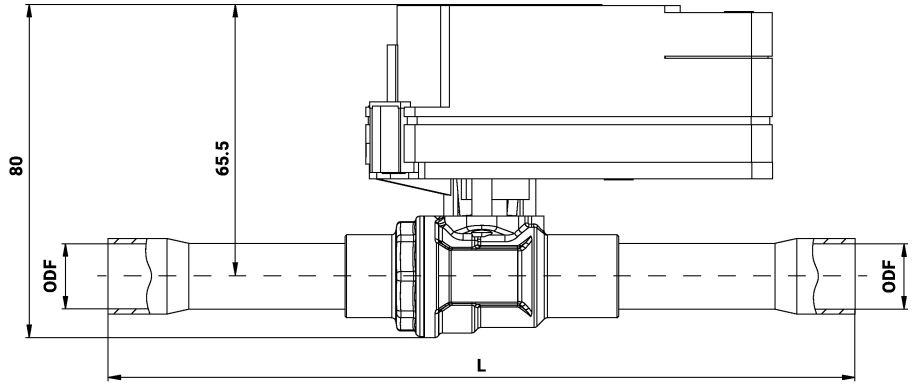

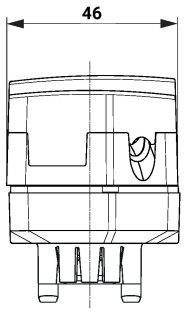

Type	L [mm]	ODF	Weight
X8016M.11A2A	180	16-16 mm	0.45 kg
X8016M.21A2A	180	16-16 mm	0.47 kg
X8022M.32A2A	190	22-22 mm	0.56 kg
X8028M.1AA2A	180	28-28 mm	0.65 kg
X8028M.2AA2A	180	28-28 mm	0.67 kg
X8035M.2AA2A	180	35-35 mm	0.76 kg
X8042M.3BA2A	190	42-42 mm	0.85 kg