Condensation switch

For detection of condensation on chilled surfaces (e.g. chilled beams). With relay contact for connection to controller and display systems or for series connection with the cooling valve to interrupt the cold water flow directly when condensation begins. IP65 / NEMA 4X rated housing.

Type Overview

Type	Output signal condensation detector relay	Additional features	Cable length
22HH-100S-6	Changeover	External sensor	7 m
22HH-100S-7	Changeover	External sensor	12 m

Technical data

Electrical data	Nominal voltage	AC/DC 24 V
	Nominal voltage range	AC 21.6...26.4 V / DC 13.5...26.4 V
	Power consumption AC	1.6 VA
	Power consumption DC	0.8 W
	Electrical connection	Pluggable spring loaded terminal block max. 2.5 mm²
	Cable entry	Cable gland with strain relief ø6...8 mm
Functional data	Medium	Water
	Switching contact	SPDT, potential-free Max. AC/DC 24 V / 1 A
	Display	LED, Green - power supply OK Red - condensation
	Display type	LED
Measuring data	Measured values	Condensation
Safety data	Protection class IEC/EN	III, Safety Extra-Low Voltage (SELV)
	Power source UL	Class 2 Supply
	Degree of protection IEC/EN	IP65
	Degree of protection NEMA/UL	NEMA 4X
	Housing	UL Enclosure Type 4X
	EU Conformity	CE Marking
	Certification IEC/EN	IEC/EN 60730-1
	Quality Standard	ISO 9001
	UL Approval	cULus acc. to UL60730-1A/-2-9/-2-13, CAN/CSA E60730-1/-2-9
	Type of action	Type 1.B
	Rated impulse voltage supply	0.8 kV
	Pollution degree	3
	Ambient humidity	Max. 95% RH, non-condensing
	Ambient temperature	-20...50°C [-4...122°F]
	Fluid temperature	-20...60°C [-4...140°F]

Technical data

Materials	Housing	Cover: PC, transparent Bottom: PC, orange Seal: NBR70, black UV resistant
	Cable gland	PA6, black

Safety notes

This device has been designed for use in stationary heating, ventilation and air-conditioning systems and must not be used outside the specified field of application. Unauthorised modifications are prohibited. The product must not be used in relation with any equipment that in case of a failure may threaten humans, animals or assets.

Ensure all power is disconnected before installing. Do not connect to live/operating equipment.

Only authorised specialists may carry out installation. All applicable legal or institutional installation regulations must be complied with during installation.

The device contains electrical and electronic components and must not be disposed of as household refuse. All locally valid regulations and requirements must be observed.

Remarks

General remarks concerning sensors

Sensing devices with a transducer should always be operated in the middle of the measuring range to avoid deviations at the measuring end points. The ambient temperature of transducer electronics should be kept constant. The transducers must be operated at a constant supply voltage (±0.2 V). When switching the supply voltage on/off, onsite power surges must be avoided.

Remark surface measurements

When measuring temperature, humidity or condensation on a surface, both the temperature of the surface and that of the ambient air influence the measurement result. When measuring on a pipe surface, the influence of the ambient air can be minimised by using thermal contact fluid.

Parts included

Description	Type
Mounting plate S housing	A-22D-A09
Thermal contact fluid	A-22P-A44
Screws	
Dowels	
Cable tie	

Accessories

Optional accessories

Description	Type
Connection adapter flex conduit, M20x1.5, for cable gland 1x 6 mm, Multipack 10 pcs.	A-22G-A01.1

Wiring diagram

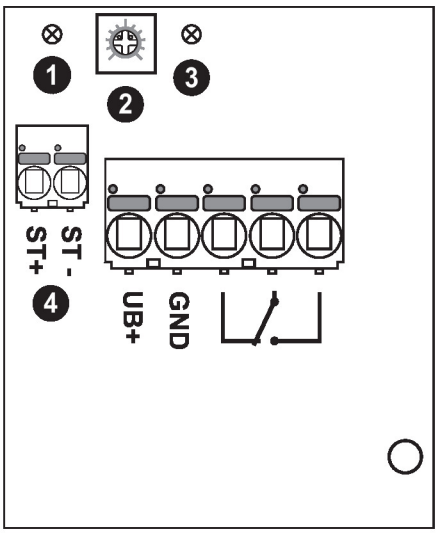

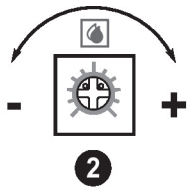

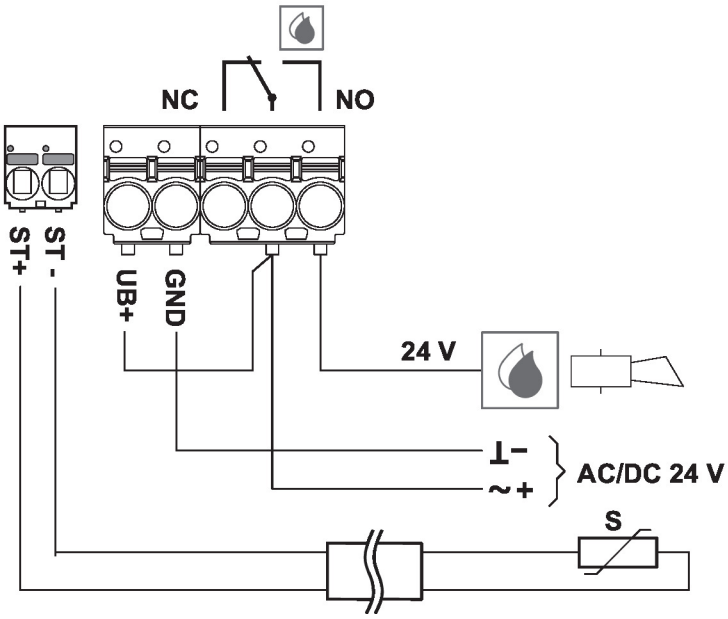

① LED red: condensation
② Sensitivity adjustment
+ less sensitive
- more sensitive
③ LED green: power supply OK
④ For external condensation sensor

Dimensions

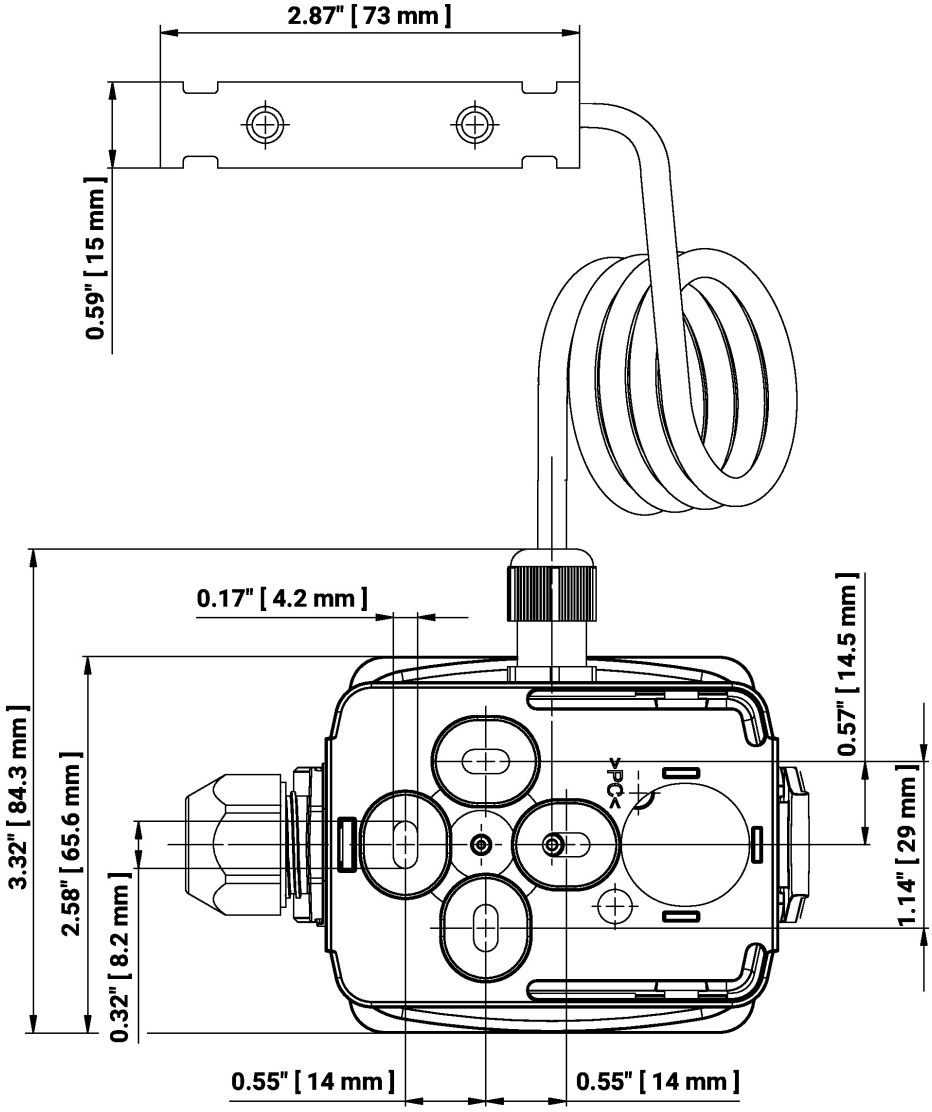

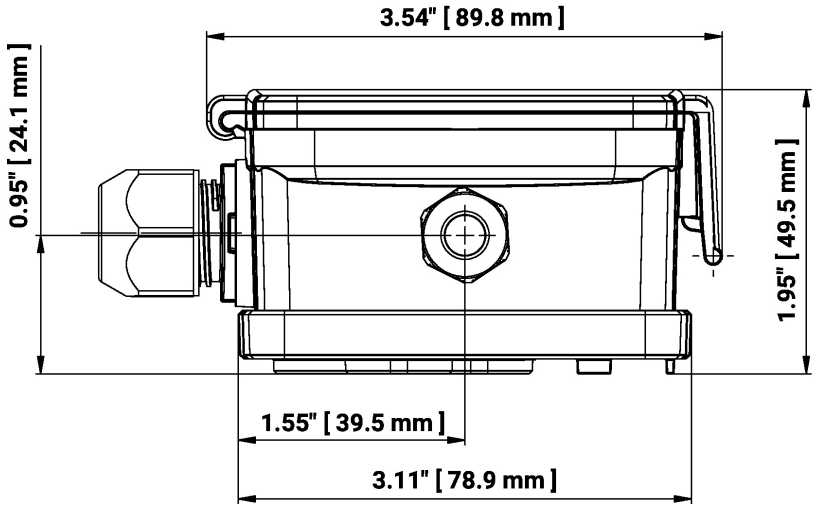

Type	Weight
22HH-100S-6	0.34 kg
22HH-100S-7	0.50 kg

Further documentation

- Installation instructions