Butterfly valve with Lug types

- For open and closed water systems
- For switching heat generators or cooling machines on/off

Picture may differ from product

Type overview

Type	DN	Kvmax [m³/h]	Kvs [m³/h]	PN	n(gl)
D6100WL	100	690	220	16	3.2
D6125WL	125	990	310	16	3.2
D6150WL	150	1780	550	16	3.2

Technical data

Functional data	Fluid	Water, water with glycol up to max. 50% vol.
	Fluid temperature	-20...120°C [-4...248°F]
	Differential pressure Δpmax	300 kPa
	Flow characteristic	0...60% opening angle: equal percentage (VDI/VDE 2173) 0...100% opening angle: S-form
	Flow characteristic note	0...100% opening angle: linear The flow characteristic can be configured to equal percentage or linear using Belimo Assistant 2.
	Leakage rate	tight, leakage rate A (EN 12266-1)
	Angle of rotation	90°
	Pipe connection	Flange according to ISO 7005-2 according to EN 1092-2
	Installation orientation	upright to horizontal (in relation to the spindle)
	Servicing	maintenance-free
Materials	Valve body	EN-GJS-400-18-LT (GGG 40.3)
	Closing element	Stainless steel 1.4581
	Spindle	Stainless steel AISI 420 (1.4021)
	Spindle seal	EPDM O-ring
	Spindle bearing	Bronze, steel, PTFE
	Seat	EPDM

Safety notes

- The valve has been designed for use in stationary heating, ventilation and air-conditioning systems and must not be used outside the specified field of application, especially in aircraft or in any other airborne means of transport.
- Only authorised specialists may carry out installation. All applicable legal or institutional installation regulations must be complied with during installation.
- The valve does not contain any parts that can be replaced or repaired by the user.
- The valve may not be disposed of as household refuse. All locally valid regulations and requirements must be observed.
- When determining the flow rate characteristic of controlled devices, the recognised directives must be observed.
- The damper must be opened and closed slowly in order to avoid hydronic shocks in the pipe system.
- The valve is not allowed to be operated without actuator or worm gear while flow is in the pipe. Without actuator or worm gear, the valve could close and cause damage (water hammer).

Product features

Operating mode

The butterfly valve is opened or closed completely by an open/close rotary actuator. Continuous rotary actuators are connected by a commercially available controller and move the valve to any position desired. The valve disk is pressed into the soft-sealing EPDM seat by a rotary movement and ensures leakage rate A (tight). The pressure losses are slight in the open position and the Kv value is at a maximum.

Manual override

Manual throttling or isolation can be carried out with a worm gear (see «Accessories»).

The worm gear with position indication is steplessly adjustable (self-locking).

Accessories

Mechanical accessories

Description	Type
Lever for butterfly valves DN 25...100	ZD6N-H100
Worm gear for butterfly valves DN 25...100	ZD6N-S100
Lever for butterfly valves DN 125...150	ZD6N-H150
Worm gear for butterfly valves DN 125...300	ZD6N-S150

Installation notes

Permissible installation orientation

The butterfly valves may be mounted upright to horizontal. The butterfly valves may not be installed in a hanging position i.e. with the spindle pointing downwards.

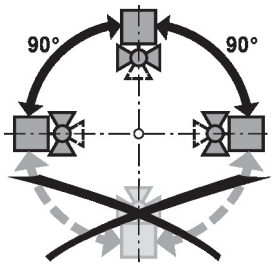

Water quality requirements

The water quality requirements specified in VDI 2035 must be adhered to.

Installation notes

Servicing

Butterfly valves and rotary actuators are maintenance-free.

Before any service work on the control element is carried out, it is essential to isolate the rotary actuator from the power supply (by unplugging the electrical cable if necessary). Any pumps in the part of the piping system concerned must also be switched off and the appropriate slide valves closed (allow all components to cool down first if necessary and always reduce the system pressure to ambient pressure level).

The system must not be returned to service until the butterfly valve and the rotary actuator have been reassembled correctly in accordance with the instructions and the pipeline has been refilled by professionally trained personnel.

To avoid a torque increase during off season shut down, exercise the butterfly valve (full open and close) at least once a month.

Flow setting

The Belimo butterfly valves have an approximate equal percentage characteristic curve between 0...60% opening angle.

The following table shows the respective Kv values in relation to the opening angle (%).

		10%	20%	30%	40%	50%	60%	70%	80%	90%	100%
DN 100	Kv (m3/h)	5	25	55	95	150	220	330	490	640	690
DN 125	Kv (m3/h)	6	35	75	130	200	310	480	710	920	990
DN 150	Kv (m3/h)	10	65	140	240	360	550	830	1220	1650	1780

Configuration linear characteristic curve

The flow characteristic can be set to linear using Belimo Assistant 2.

The following table shows the respective Kv values in relation to the control signal (%).

		10%	20%	30%	40%	50%	60%	70%	80%	90%	100%
DN 100	Kv (m3/h)	69	138	207	276	345	414	483	552	621	690
DN 125	Kv (m3/h)	99	198	297	396	495	594	693	792	891	990
DN 150	Kv (m3/h)	178	356	534	712	890	1068	1246	1424	1602	1780

Dimensions

Dimensional drawings

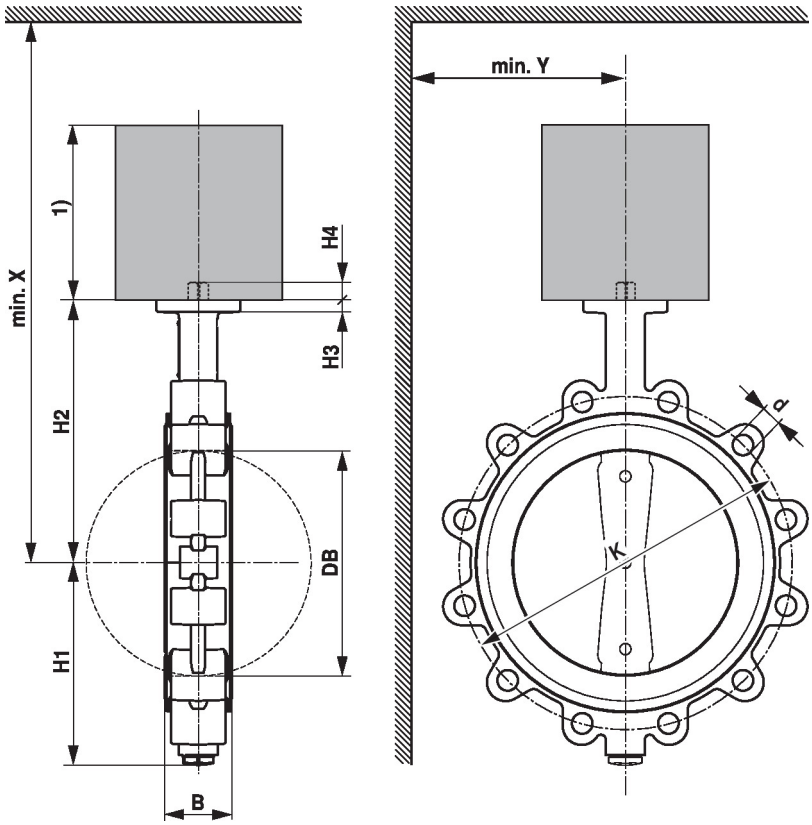

The actuator dimensions can be found on the respective actuator data sheet.

Type	DN	B [mm]	DB [mm]	H1 [mm]	H2 [mm]	H3 [mm]	H4 [mm]	d (PN16)	K (PN16) [mm]	X [mm]	Y [mm]	kg
D6100WL	100	52	104	109	168	12	13	8 x M16	180	430	190	6.7
D6125WL	125	56	129	124	186	12	23	8 x M16	210	450	210	10
D6150WL	150	56	154	140	202	12	23	8 x M20	240	470	220	12

Further documentation

- The complete product range for water applications
- Data sheets for actuators
- Installation instructions for actuators and/or butterfly valves
- General notes for project planning