70688-00001.C

1

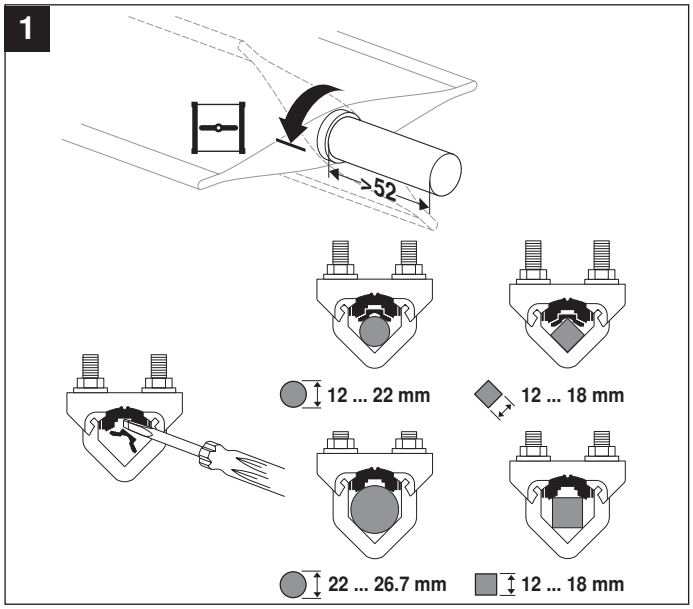

2

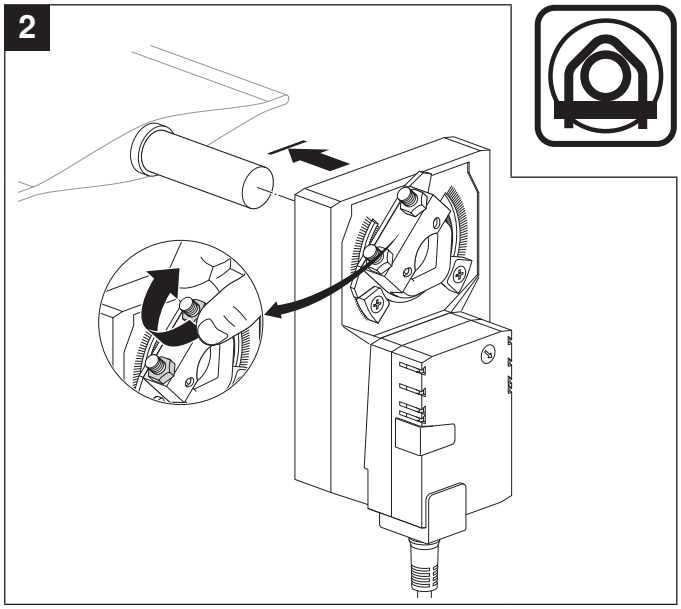

3

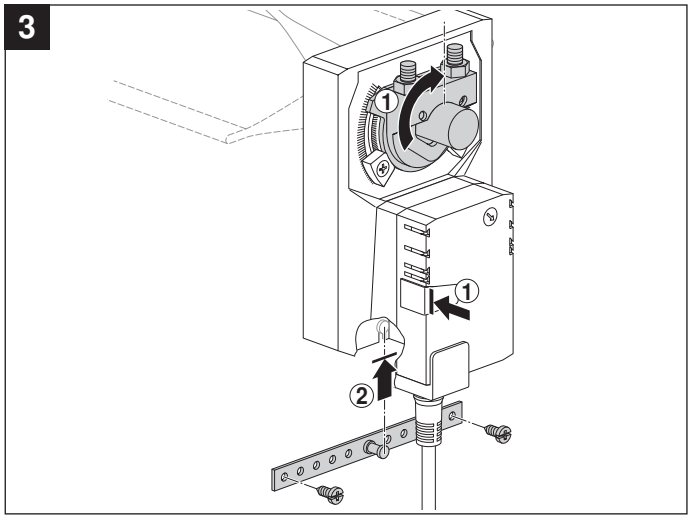

4

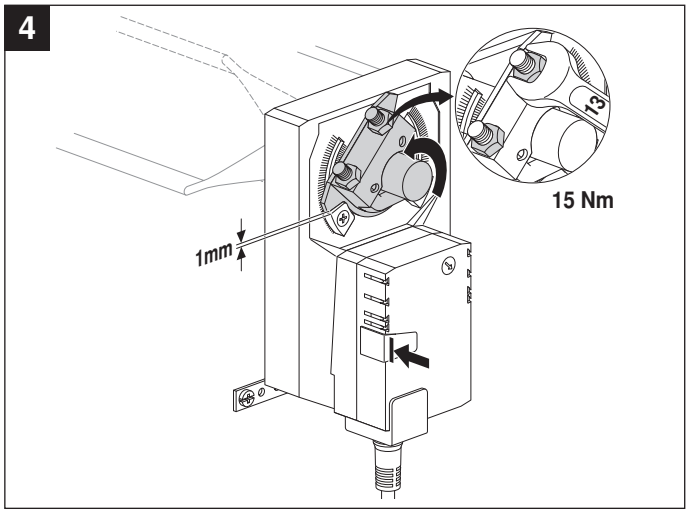

5

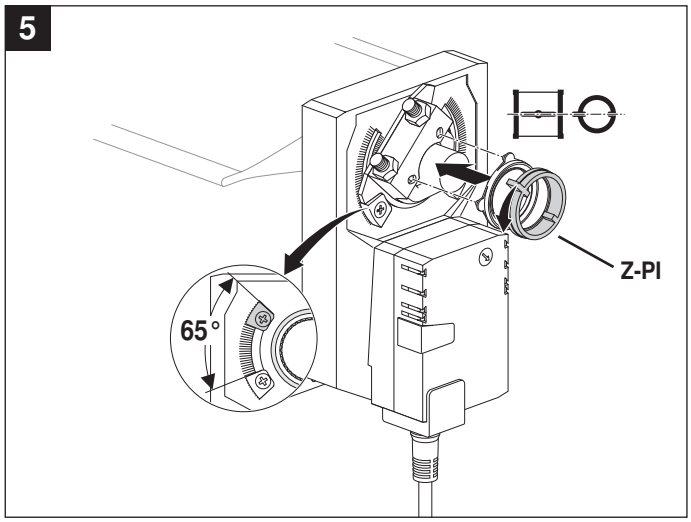

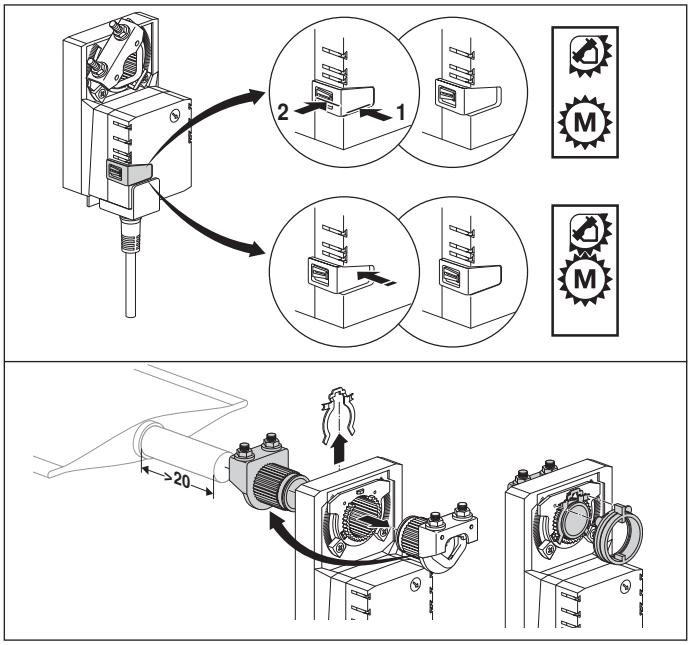

www.belimo.com/safety

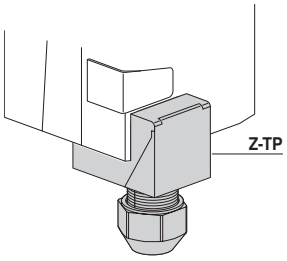
Z-TP

1

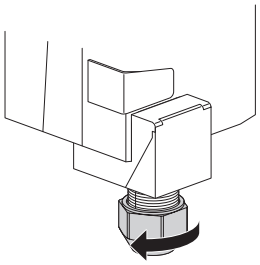

2

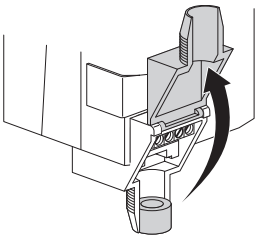

3

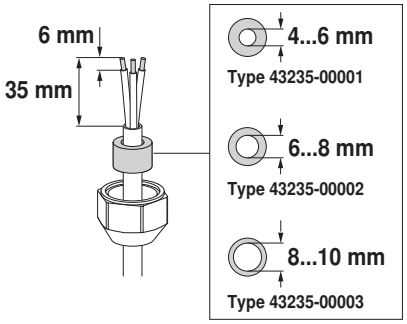
6 mm
35 mm
4...6 mm
Type 43235-00001
6...8 mm
Type 43235-00002
8...10 mm
Type 43235-00003

4

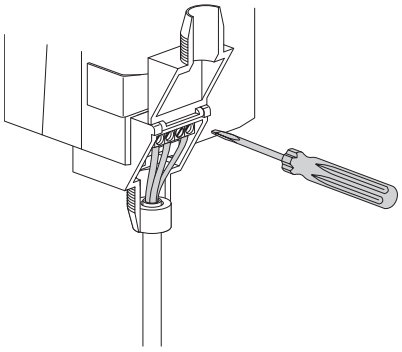

5

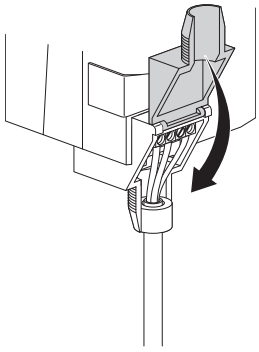

6

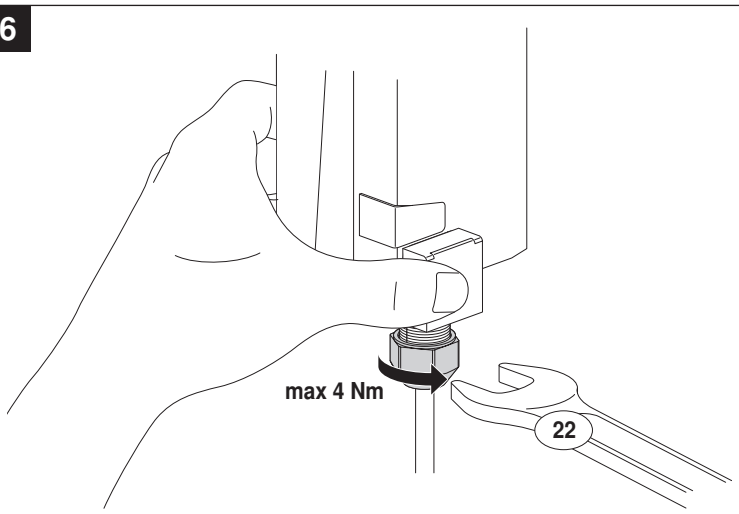
max 4 Nm
22

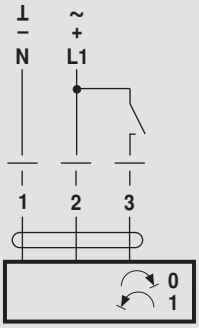

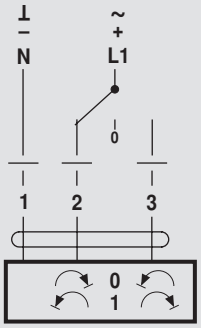

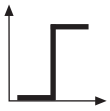

AC 24 V / DC 24 V

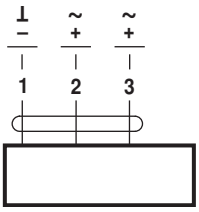

GM24A..

AC 100 ... 240 V ⚠

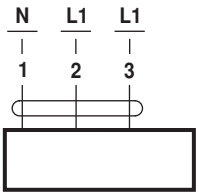

GM230A..

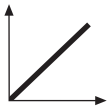

AC 24 V / DC 24 V

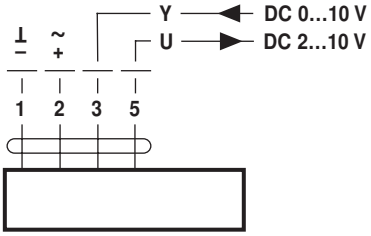

GM24A-SR..
GM24A-MF..

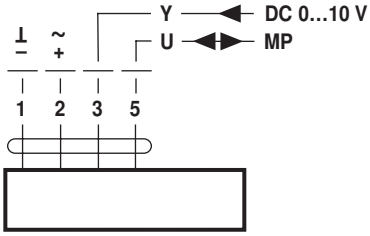

GM24A-MP..

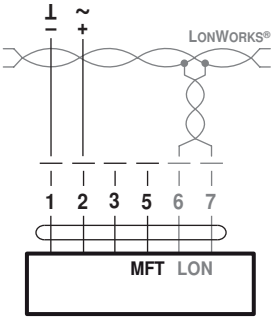

..M24ALON

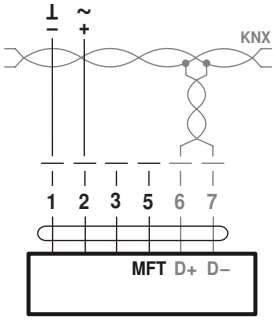

..M24A-KNX

BACnet MS/TP / Modbus RTU

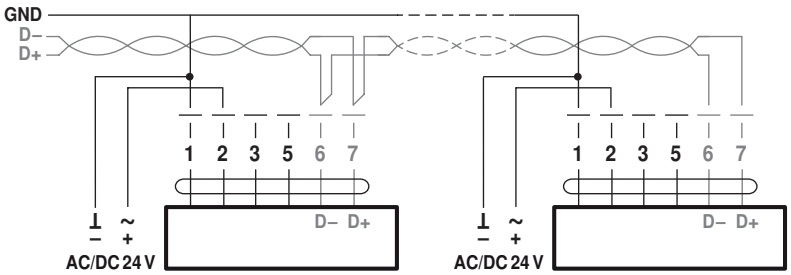

..M24A-MOD ..M24A-MOD

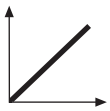

AC 24 V / DC 24 V

BACnet MS/TP / Modbus RTU

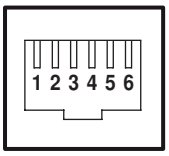

1 AC/DC 24 V
2 GND
3 D– (A)
4 D+ (B)
5 AC/DC 24 V
6 GND

..M24A-MOD-J6

BACnet MS/TP / Modbus RTU / analog

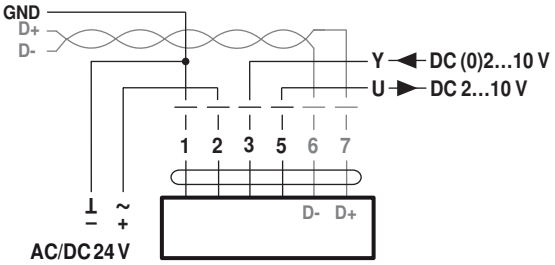

..M24A-MOD

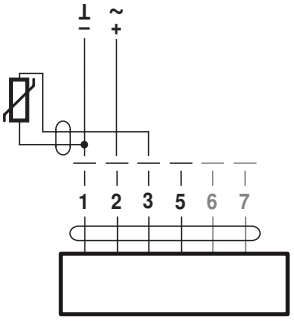

Ni1000	–28...+98 °C	850...1600 Ω [2]
PT1000	–35...+155 °C	850...1600 Ω [2]
NTC	–10...+160 °C [1]	200 Ω...60 kΩ [2]

..LON / ..-MOD / ..-KNX

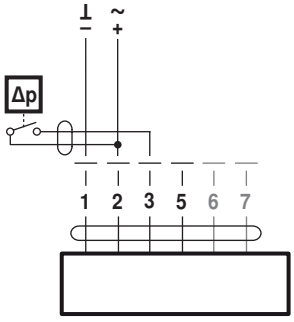

..LON / ..-MOD / ..-KNX

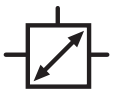

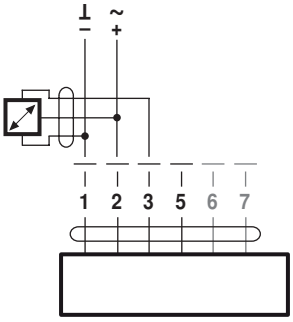

..LON / ..-MOD / ..-KNX