VAV-Universal, ready-to-connect rotary actuator for VAV and CAV units in technical building installations

- Air damper size up to approx. 2 m²
- Torque motor 8 Nm
- Nominal voltage AC/DC 24 V
- Control communicative PP
- Running time motor 4 s

Picture may differ from product

Technical data

Electrical data	Nominal voltage	AC/DC 24 V
	Nominal voltage frequency	50/60 Hz
	Nominal voltage range	AC 19.2...28.8 V / DC 21.6...28.8 V
	Power consumption in operation	13 W
	Power consumption in rest position	2 W
	Power consumption for wire sizing	23 VA
	Inrush current (Imax)	20.0 A @ 5 ms
	Connection supply / control	Cable 0.5 m with VST connector
	Parallel operation	No
Functional data	Torque motor	8 Nm
	Direction of motion variable	At VRU-..-BAC with Belimo Assistant App
	Manual override	with push-button, can be locked
	Angle of rotation	Max. 95°
	Angle of rotation note	can be limited on both sides with adjustable mechanical end stops
	Running time motor	4 s / 90°
	Sound power level, motor	56 dB(A)
	Adaptation setting range variable	Triggering at VRU-..-BAC, by pressing the Adaptation button or with Belimo Assistant App
	Mechanical interface	Universal shaft clamp 8...26.7 mm
	Position indication	Mechanical, pluggable
Safety data	Protection class IEC/EN	III, Safety Extra-Low Voltage (SELV)
	Degree of protection IEC/EN	IP54
	EMC	CE according to 2014/30/EU
	Certification IEC/EN	IEC/EN 60730-1 and IEC/EN 60730-2-14
	Type of action	Type 1
	Rated impulse voltage supply / control	0.8 kV
	Pollution degree	3
	Ambient humidity	Max. 95% RH, non-condensing
	Ambient temperature	-30...40°C [-22...104°F]
	Storage temperature	-40...80°C [-40...176°F]
	Servicing	maintenance-free
Weight	Weight	0.97 kg

Safety notes

- The device must not be used outside the specified field of application, especially not in aircraft or in any other airborne means of transport.
- Outdoor application: only possible in case that no (sea) water, snow, ice, insolation or aggressive gases interfere directly with the device and that it is ensured that the ambient conditions remain within the thresholds according to the data sheet at any time.
- Only authorised specialists may carry out installation. All applicable legal or institutional installation regulations must be complied with during installation.
- The device may only be opened at the manufacturer's site. It does not contain any parts that can be replaced or repaired by the user.
- Cables must not be removed from the device.
- Self adaptation is necessary when the system is commissioned and after each adjustment of the angle of rotation (press the adaptation push-button once).
- To calculate the torque required, the specifications supplied by the damper manufacturers concerning the cross-section and the design, as well as the installation situation and the ventilation conditions must be observed.
- The device contains electrical and electronic components and must not be disposed of as household refuse. All locally valid regulations and requirements must be observed.

Product features

Adjustable angle of rotation Adjustable angle of rotation with mechanical end stops.

Accessories

Electrical accessories

Description	Type
VAV-Universal - Volumetric flow / branch pressure controller	VRU-D3-BAC
VAV-Universal - Volumetric flow / branch pressure controller	VRU-M1-BAC
VAV-Universal - room pressure controller	VRU-M1R-BAC

Electrical installation

Plug-in connection with pre-assembled cable-plug unit

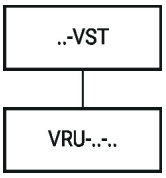

Installation notes

Disconnect actuator

The connecting cable of the VST damper actuator can be removed from the VRU controller using a screwdriver (size 0...3) as shown in the illustration.

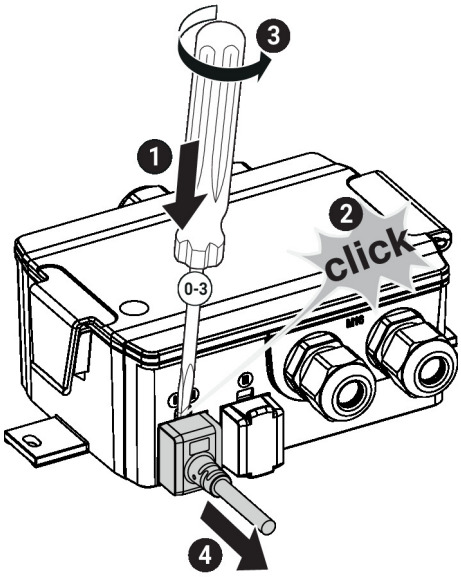

Connect actuator

To ensure IP protection and the electrical connection, the VST plug must be fully inserted into the connector socket. For this, a certain amount of force is required.

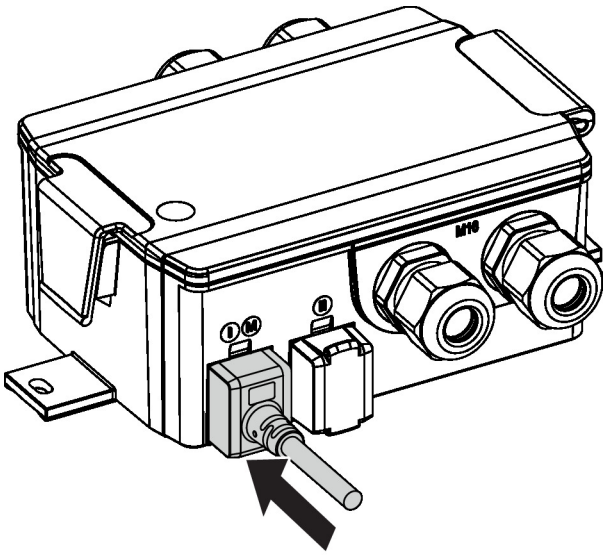
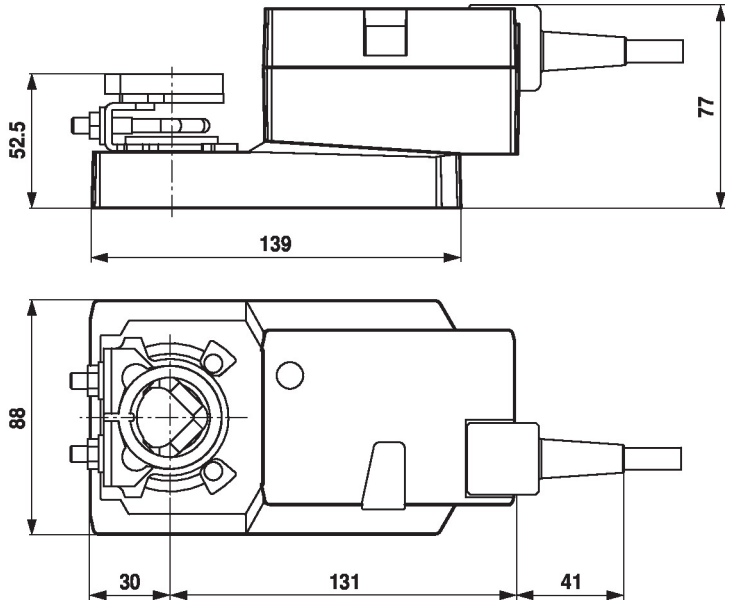
Dimensions