Auxiliary switch unit, suitable for the spring-return actuators NF..A.., SF..A.., LF..

- Two switches (SPDT)
- Adjustable switching points
- including adapter

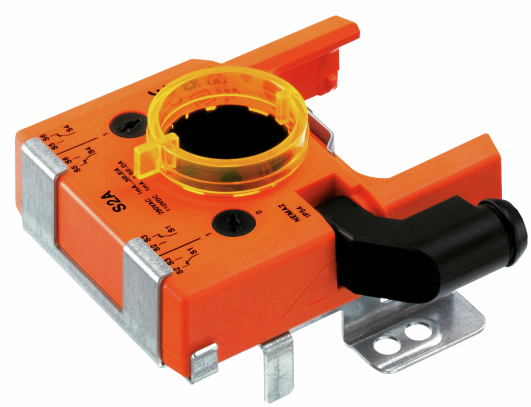

Picture may differ from product

Technical data

Electrical data	Auxiliary switch	2x SPDT, 0...100%, adjustable
	Switching capacity auxiliary switch	1 mA...3 A (0.5 A inductive), DC 5 V...AC 250 V / 1 mA...0.5 A (0.2 A inductive; L/R = 3.4 ms), DC 5 V...DC 110 V
	Switching points auxiliary switch	Adjustable across the entire range of rotation 0...1 of the actuator. Presetting with scale possible.
	Connection auxiliary switch	Cable 1 m, 6x 0.75 mm^2
	Electrical connection	Cable
Safety data	Protection class IEC/EN	II, reinforced insulation
	Degree of protection IEC/EN	IP54
	EMC	CE according to 2014/30/EU
	Low voltage directive	CE according to 2014/35/EU
	Certification IEC/EN	IEC/EN 60730-1 and IEC/EN 60730-2-14
	Hygiene test	According to VDI 6022 Part 1 / SWKI VA 104-01, cleanable and disinfectable, low emission
	Type of action	Type 1.B
	Rated impulse voltage auxiliary switch	4 kV
	Pollution degree	3
	Ambient humidity	Max. 95% RH, non-condensing
	Ambient temperature	-30...50°C [-22...122°F]
	Storage temperature	-40...80°C [-40...176°F]
	Servicing	maintenance-free
Weight	Weight	0.33 kg

Safety notes

- The device must not be used outside the specified field of application, especially not in aircraft or in any other airborne means of transport.
- Outdoor application: only possible in case that no (sea) water, snow, ice, insolation or aggressive gases interfere directly with the device and that it is ensured that the ambient conditions remain within the thresholds according to the data sheet at any time.
- Only authorised specialists may carry out installation. All applicable legal or institutional installation regulations must be complied with during installation.
- The device may only be opened at the manufacturer's site. It does not contain any parts that can be replaced or repaired by the user.
- Cables must not be removed from the device.
- The device contains electrical and electronic components and must not be disposed of as household refuse. All locally valid regulations and requirements must be observed.

Product features

Operating mode

A carrier plate uses adaptation to make a positive fit on the spring-return actuator and transfers the rotary movement directly to the feedback potentiometer.

Switching points can be freely selected with an adjustment dial. The current switch position can be read off at any time.

Application

The auxiliary switch unit is used for signaling the position or for exercising switching functions in any given angle setting.

Simple direct mounting

The auxiliary switch unit is connected directly by means of adaptation with the hollow shaft (LF.., NF..A.., SF..A..) of the actuator. Once it is mounted, the unit is screwed to the actuator.

The shaft clamps mounted on the bottom side.

Electrical installation

Wire colours:
S1 = violet
S2 = red
S3 = white
S4 = orange
S5 = pink
S6 = grey

Wiring diagrams

Auxiliary switch

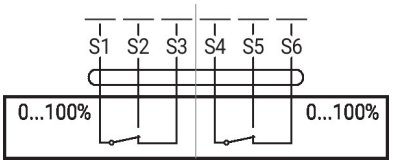

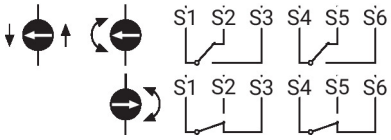

Operating controls and indicators

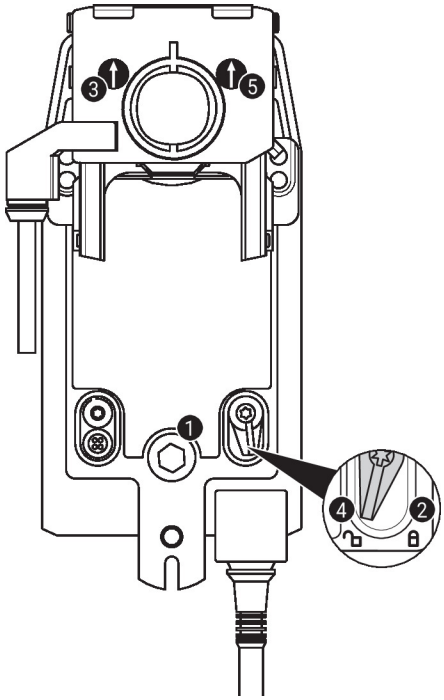

Auxiliary switch settings NF..A / SF..A

Note: Perform settings on the auxiliary switch only in deenergised state.

For the auxiliary switch position settings, carry out points ❶ to ❹ successively.

❶ **Manual override**
Turn the hand crank until the desired switching position is set.

❷ **Fasten the locking device**
Turn the locking switch to the „Locked padlock“ symbol.

❸ **Auxiliary switch - 1**
Turn the rotary knob until the arrow points to the vertical line.
The arrow direction always indicates the switching position (S1-S2 or S1-S3).
If the auxiliary switch should switch in the opposite direction, rotate the auxiliary switch rotary knob by 180°. Alternatively the switching position can be checked with a continuity tester on the cable of the auxiliary switch.

❹ **Unlock the locking device**
Turn the locking switch to the „Unlocked padlock“ symbol or unlock with the hand crank.

❺ **Auxiliary switch - 2**
Same procedure as for auxiliary switch 1 (step ❶ to ❹).

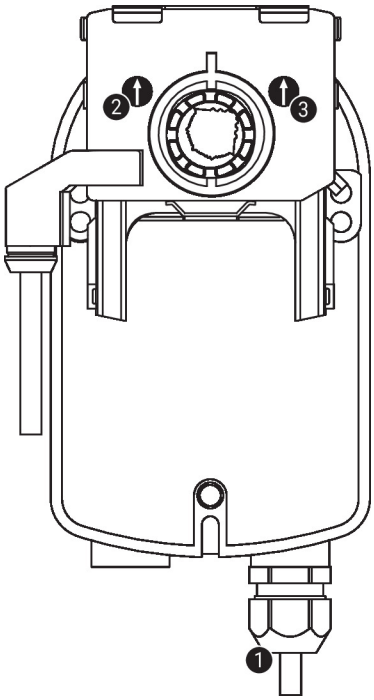

Auxiliary switch settings LF..

Note: Perform settings on the auxiliary switch only in deenergised state.

For the auxiliary switch position settings, carry out points ❶ to ❷ successively.

❶ **Manual adjusting**
Connect the actuator and move it into the desired switching position.

❷ **Auxiliary switch - 1**
Turn rotary knob until the arrow points to the vertical line.
The arrow direction always indicates the switching position (S1-S2 or S1-S3).
If the auxiliary switch should switch in the opposite direction, rotate the auxiliary switch rotary knob by 180°. Alternatively the switching position can be checked with a continuity tester on the cable of the auxiliary switch.

❸ **Auxiliary switch - 2**
Same procedure as for auxiliary switch 1 (step ❶ to ❷).

Dimensions

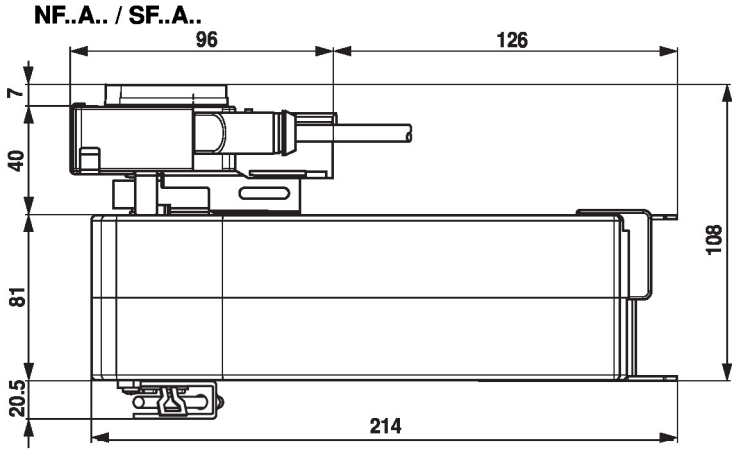

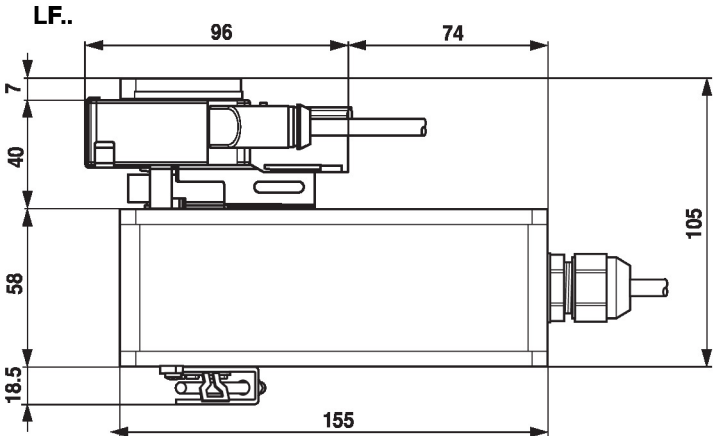

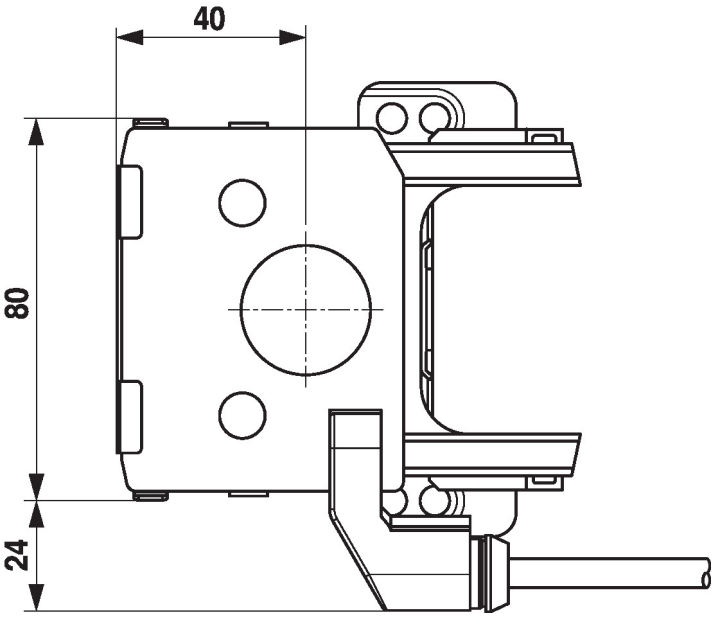

Type	Weight
S2A-F	0.33 kg