Communicative rotary actuator for ball valves

- Torque motor 20 Nm
- Nominal voltage AC/DC 24 V
- Control modulating, communicative, hybrid
- Communication via BACnet MS/TP, Modbus RTU, Belimo-MP-Bus or conventional control
- Conversion of sensor signals

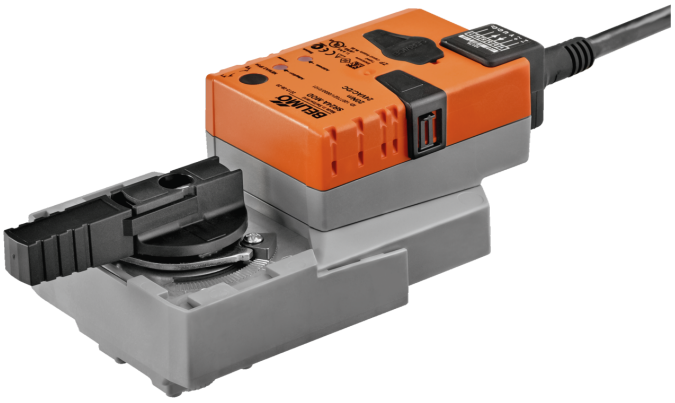

Picture may differ from product

Technical data

Electrical data	Nominal voltage	AC/DC 24 V
	Nominal voltage frequency	50/60 Hz
	Nominal voltage range	AC 19.2...28.8 V / DC 21.6...28.8 V
	Power consumption in operation	3.5 W
	Power consumption in rest position	1.25 W
	Power consumption for wire sizing	6 VA
	Connection supply / control	Cable 1 m, 6x 0.75 mm²
Data bus communication	Communicative control	BACnet MS/TP Modbus RTU (factory setting) MP-Bus
	Number of nodes	BACnet / Modbus see interface description MP-Bus max. 8
Functional data	Torque motor	20 Nm
	Operating range Y	2...10 V
	Operating range Y variable	0.5...10 V
	Position feedback U	2...10 V
	Position feedback U note	Max. 1 mA
	Position feedback U variable	Start point 0.5...8 V End point 2...10 V
	Position accuracy	±5%
	Manual override	with push-button, can be locked
	Running time motor	90 s / 90°
	Running time motor variable	90...350 s
	Sound power level, motor	45 dB(A)
	Adaptation setting range	manual (automatic on first power-up)
	Adaptation setting range variable	No action Adaptation when switched on Adaptation after pushing the manual override button
	Override control, controllable via bus communication	MAX (maximum position) = 100% MIN (minimum position) = 0% ZS (intermediate position) = 50%
	Override control variable	MAX = (MIN + 33%)...100% MIN = 0%...(MAX – 33%) ZS = MIN...MAX
	Position indication	Mechanical, pluggable
Safety data	Protection class IEC/EN	III, Safety Extra-Low Voltage (SELV)
	Power source UL	Class 2 Supply
	Degree of protection IEC/EN	IP54

Technical data

Safety data	Degree of protection NEMA/UL	NEMA 2
	Housing	UL Enclosure Type 2
	EMC	CE according to 2014/30/EU
	Certification IEC/EN	IEC/EN 60730-1 and IEC/EN 60730-2-14
	UL Approval	cULus according to UL60730-1A, UL60730-2-14 and CAN/CSA E60730-1 The UL marking on the actuator depends on the production site, the device is UL-compliant in any case
	Type of action	Type 1
	Rated impulse voltage supply / control	0.8 kV
	Pollution degree	3
	Ambient humidity	Max. 95% RH, non-condensing
	Ambient temperature	-30...50°C [-22...122°F]
	Storage temperature	-40...80°C [-40...176°F]
	Servicing	maintenance-free
Weight	Weight	0.96 kg

Safety notes

- This device has been designed for use in stationary heating, ventilation and air-conditioning systems and must not be used outside the specified field of application, especially in aircraft or in any other airborne means of transport.
- Outdoor application: Only possible if no (sea) water, snow, ice, sunlight or aggressive gases act directly on the device and if it is ensured that the ambient conditions remain within the limit values specified in the data sheet at all times.
- Only authorised specialists may carry out installation. All applicable legal or institutional installation regulations must be complied with during installation.
- The switch for changing the direction of rotation may only be operated by authorised specialists. The direction of rotation must not in particular be reversed in a frost protection circuit.
- The device may only be opened at the manufacturer's site. It does not contain any parts that can be replaced or repaired by the user.
- Cables must not be removed from the device.
- The device contains electrical and electronic components and must not be disposed of as household refuse. All locally valid regulations and requirements must be observed.

Product features

Operating mode
The actuator is fitted with an integrated interface for BACnet MS/TP, Modbus RTU and MP-Bus. It receives the digital control signal from the control system and returns the current status.

Converter for sensors
Connection option for a sensor (passive, active or with switching contact). In this way, the analogue sensor signal can be easily digitised and transferred to the bus systems : BACnet, Modbus or MP-Bus.

Configurable device
The factory settings cover the most common applications. Single parameters can be modified with Belimo Assistant 2.

Combination analogue - communicative (hybrid mode)
With conventional control by means of an analogue control signal, BACnet or Modbus can be used for the communicative position feedback

Simple direct mounting
Straightforward direct mounting on the ball valve with only one central screw. The assembly tool is integrated in the plug-in position indicator. The mounting orientation in relation to the ball valve can be selected in 90° steps.

Manual override
Manual override with push-button possible (the gear train is disengaged for as long as the button is pressed or remains locked).

Product features

Adjustable angle of rotation
Adjustable angle of rotation with mechanical end stops.

High functional reliability
The actuator is overload protected, requires no limit switches and automatically stops when the end stop is reached.

Home position
The first time the supply voltage is switched on, i.e. at the time of commissioning, the actuator carries out an adaptation, which is when the operating range and position feedback adjust themselves to the mechanical setting range.

The actuator then moves into the position defined by the control signal.

Factory setting: Y2 (counter-clockwise rotation).

Adaptation and synchronisation
An adaptation can be triggered manually by pressing the "Adaptation" button or with Belimo Assistant 2. Both mechanical end stops are detected during the adaptation (entire setting range).

Automatic synchronisation after pressing the manual override button is configured. The synchronisation is in the home position (0%).

The actuator then moves into the position defined by the control signal.

A range of settings can be made using Belimo Assistant 2.

Accessories

Tools

Description	Type
Service tool for wired and wireless setup, on-site operation and troubleshooting.	Belimo Assistant 2
Belimo Assistant Link Bluetooth and USB to NFC and MP-Bus converter for configurable and communicative devices	LINK.10
Connecting cable 5 m, A: RJ11 6/4 LINK.10, B: 6-pin for connection to service socket	ZK1-GEN
Connecting cable 5 m, A: RJ11 6/4 LINK.10, B: free wire end for connection to MP/PP terminal	ZK2-GEN

Electrical installation

Supply from isolating transformer.

The wiring of the line for BACnet MS/TP / Modbus RTU is to be carried out in accordance with applicable RS-485 regulations.

Modbus / BACnet: Supply and communication are not galvanically isolated. COM and ground of the devices must be connected to each other.

Wire colours:
1 = black
2 = red
3 = white
5 = orange
6 = pink
7 = grey

Functions:
C1 = D- (wire 6)
C2 = D+ (wire 7)

Electrical installation

BACnet MS/TP / Modbus RTU

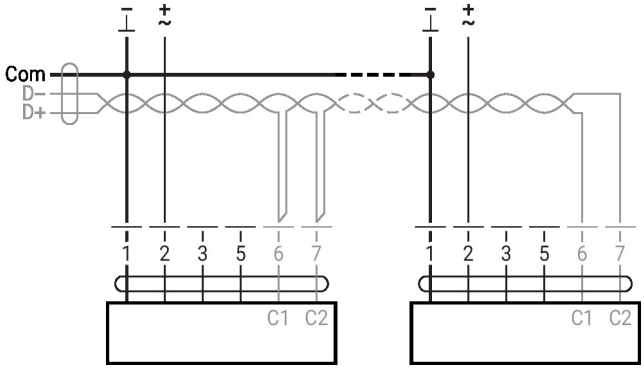

Further electrical installations

MP-Bus

MP-Bus Network topology

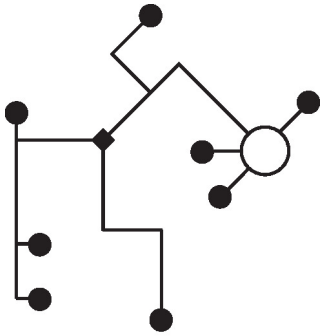

There are no restrictions for the network topology (star, ring, tree or mixed forms are permitted).
Supply and communication in one and the same 3-wire cable
• no shielding or twisting necessary
• no terminating resistors required

MP-Bus

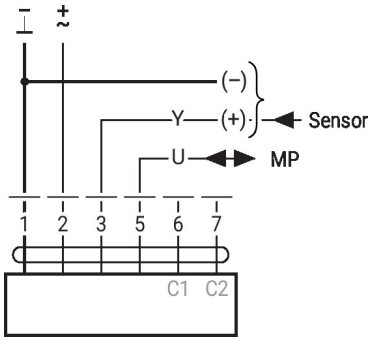

Functions with specific parameters (configuration necessary)

Modbus RTU / BACnet MS/TP with analogue setpoint (hybrid operation)

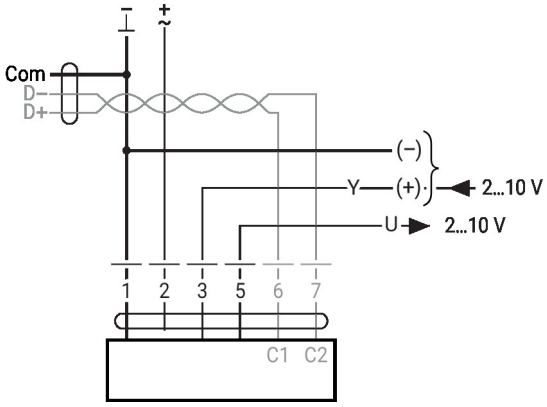

Further electrical installations

Sensor connection

Connection with active sensor, e.g. 0...10 V @ 0...50°C

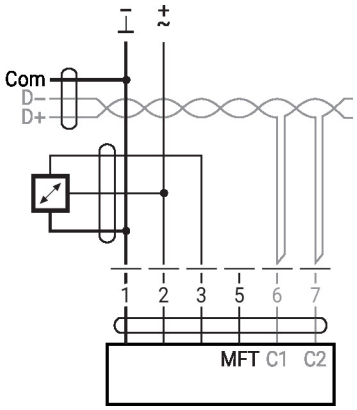

Possible input voltage range:
0...10 V
Resolution 30 mV

Connection with switching contact, e.g. differential pressure switch

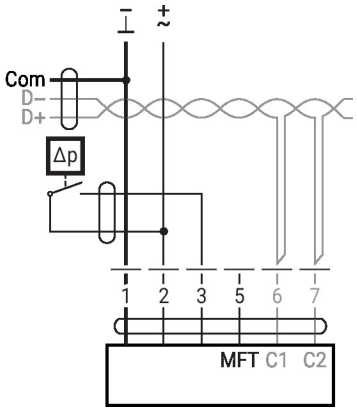

Switching contact requirements:
The switching contact must be able to switch a current of 16 mA at 24 V accurately.
Start point of the operating range must be configured on the MOD actuator as ≥0.5 V.

Connection with passive sensor, e.g. Pt1000, Ni1000, NTC

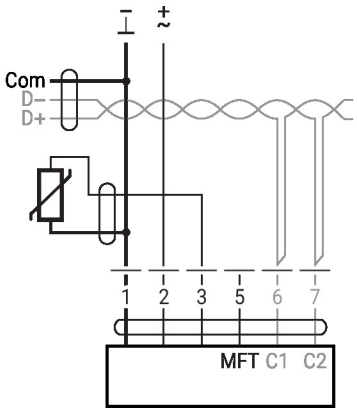

Ni1000	−28...+98°C	850...1600 Ω [2]
PT1000	−35...+155°C	850...1600 Ω [2]
NTC	−10...+160°C [1]	200 Ω...60 kΩ [2]

1) depending on type
2) Resolution 1 Ohm
Compensation of the measured value is recommended

Operating controls and indicators

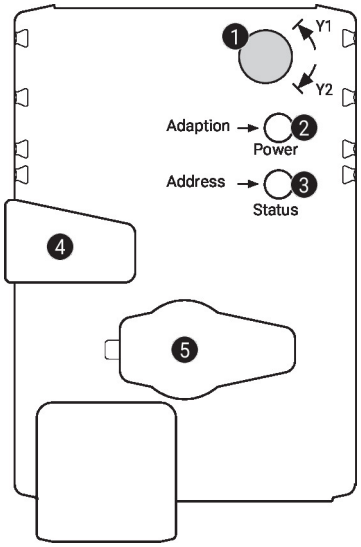

1 Direction-of-rotation switch

Switch over:	Direction of rotation changes

2 Push-button and LED display green

Off:	No power supply or malfunction
On:	In operation
Flashing:	In address mode: Pulses according to set address (1...16) When starting: Reset to factory setting (Communication)
Press button:	In standard mode: Triggers angle-of-rotation adaptation In address mode: Confirmation of set address (1...16)

3 Push-button and LED display yellow

Off:	Standard mode
On:	Adaptation or synchronisation process active or actuator in address mode (LED display green flashing)
Flickering:	BACnet / Modbus communication active
Press button:	In operation (>3 s): Switch address mode on and off In address mode: Address setting by pressing several times When starting (>5 s): Reset to factory setting (Communication)

4 Manual override button

Press button:	Gear train disengages, motor stops, manual override possible
Release button:	Gear train engages, standard mode

5 Service plug
For connecting configuration and service tools

Check power supply connection

2 Off and 3 On	Possible wiring error in power supply

Service

Using Belimo Assistant 2, device parameters can be modified. Belimo Assistant 2 can operate on a smartphone, tablet or PC. The available connection options vary depending on the hardware on which Belimo Assistant 2 is installed.

For more information about Belimo Assistant 2, refer to the Quick Guide – Belimo Assistant 2.

Wired connection

Belimo devices can be accessed by connecting Belimo Assistant Link to the USB port on a PC or laptop and to the Service Socket or MP-Bus wire on the device.

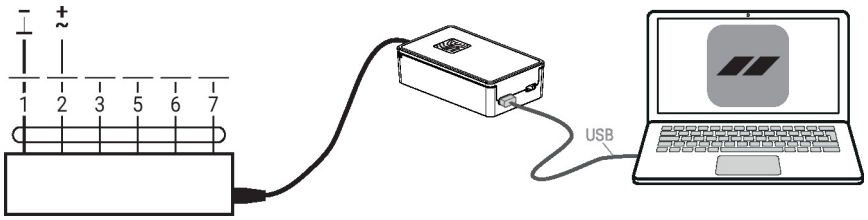

Service

Quick addressing

1. Press the "Address" button until the green "Power" LED is no longer illuminated. The green "Power" LED flashes in accordance with the previously set address.

2. Set the address by pressing the "Address" button the corresponding number of times (1...16).

3. The green LED flashes in accordance with the address that has been entered (1...16). If the address is not correct, it can be reset in accordance with step 2.

4. Confirm the address setting by pressing the green "Adaptation" button.

If the address is not confirmed within 60 seconds, the address procedure will be ended. Any address change that has already been started will be discarded.

The resulting BACnet MS/TP and Modbus RTU address is made up of the set basic address plus the short address (e.g. 100+7=107).

Dimensions

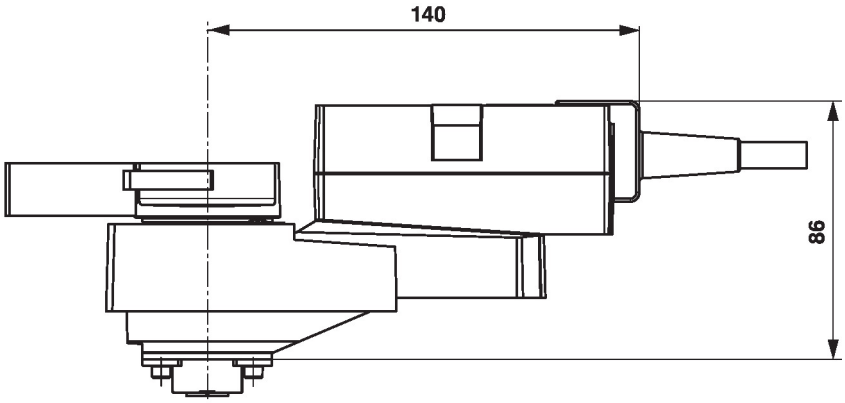

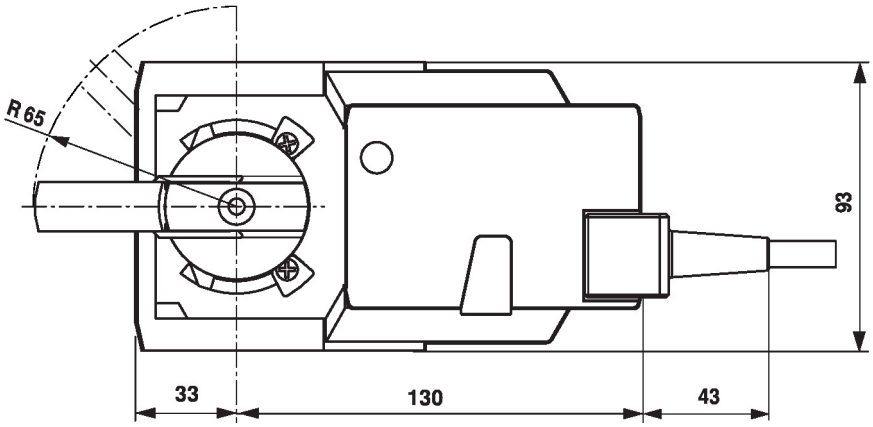

Further documentation

- Tool connections
- BACnet Interface description
- Modbus Interface description
- Overview MP Cooperation Partners
- MP Glossary
- Introduction to MP-Bus Technology
- The complete product range for water applications
- Data sheets for ball valves
- Installation instructions for actuators and/or ball valves
- General notes for project planning
- Quick Guide – Belimo Assistant 2