Communicative rotary actuator for rotary valves and butterfly valves

- Torque motor 20 Nm
- Nominal voltage AC/DC 24 V
- Control modulating, communicative 2...10 V variable
- Position feedback 2...10 V variable
- Communication via Belimo MP-Bus
- Conversion of sensor signals

Picture may differ from product

## Technical data

| | | |
|---|---|---|
| **Electrical data** | Nominal voltage | AC/DC 24 V |
| | Nominal voltage frequency | 50/60 Hz |
| | Nominal voltage range | AC 19.2...28.8 V / DC 21.6...28.8 V |
| | Power consumption in operation | 3.5 W |
| | Power consumption in rest position | 1.25 W |
| | Power consumption for wire sizing | 6 VA |
| | Connection supply / control | Cable 1 m, 4x 0.75 mm² |
| | Parallel operation | Yes (note the performance data) |
| **Data bus communication** | Communicative control | MP-Bus |
| | Number of nodes | MP-Bus max. 8 |
| **Functional data** | Torque motor | 20 Nm |
| | Operating range Y | 2...10 V |
| | Input impedance | 100 kΩ |
| | Operating range Y variable | Start point 0.5...30 V<br>End point 2.5...32 V |
| | Operating modes optional | Open/close<br>3-point (AC only)<br>Modulating (DC 0...32 V) |
| | Position feedback U | 2...10 V |
| | Position feedback U note | Max. 0.5 mA |
| | Position feedback U variable | Start point 0.5...8 V<br>End point 2.5...10 V |
| | Position accuracy | ±5% |
| | Manual override | with push-button, can be locked |
| | Running time motor | 90 s / 90° |
| | Running time motor variable | 90...350 s |
| | Sound power level, motor | 45 dB(A) |
| | Adaptation setting range | manual (automatic on first power-up) |
| | Adaptation setting range variable | No action<br>Adaptation when switched on<br>Adaptation after pushing the manual override button |
| | Override control | MAX (maximum position) = 100%<br>MIN (minimum position) = 0%<br>ZS (intermediate position, AC only) = 50% |
| | Override control variable | MAX = (MIN + 33%)...100%<br>MIN = 0%...(MAX – 33%)<br>ZS = MIN...MAX |
| | Position indication | Mechanical, integrated, two-section |
| **Safety data** | Protection class IEC/EN | III, Safety Extra-Low Voltage (SELV) |
| | Power source UL | Class 2 Supply |
| | Degree of protection IEC/EN | IP54 |

## Technical data

| | | |
|---|---|---|
| **Safety data** | Degree of protection NEMA/UL | NEMA 2 |
| | Housing | UL Enclosure Type 2 |
| | EMC | CE according to 2014/30/EU |
| | Certification IEC/EN | IEC/EN 60730-1 and IEC/EN 60730-2-14 |
| | UL Approval | cULus according to UL60730-1A, UL60730-2-14 and CAN/CSA E60730-1<br>The UL marking on the actuator depends on the production site, the device is UL-compliant in any case |
| | Type of action | Type 1 |
| | Rated impulse voltage supply / control | 0.8 kV |
| | Pollution degree | 3 |
| | Ambient humidity | Max. 95% RH, non-condensing |
| | Ambient temperature | -30...50°C [-22...122°F] |
| | Storage temperature | -40...80°C [-40...176°F] |
| | Servicing | maintenance-free |
| **Mechanical data** | Connection flange | F05 |
| **Weight** | Weight | 1.0 kg |

## Safety notes

- This device has been designed for use in stationary heating, ventilation and air-conditioning systems and must not be used outside the specified field of application, especially in aircraft or in any other airborne means of transport.
- Outdoor application: Only possible if no (sea) water, snow, ice, sunlight or aggressive gases act directly on the device and if it is ensured that the ambient conditions remain within the limit values specified in the data sheet at all times.
- Only authorised specialists may carry out installation. All applicable legal or institutional installation regulations must be complied with during installation.
- The switch for changing the direction of rotation may only be operated by authorised specialists. The direction of rotation must not in particular be reversed in a frost protection circuit.
- The device may only be opened at the manufacturer's site. It does not contain any parts that can be replaced or repaired by the user.
- Cables must not be removed from the device.
- The device contains electrical and electronic components and must not be disposed of as household refuse. All locally valid regulations and requirements must be observed.

## Product features

**Operating mode**

Conventional operation:

The actuator is connected with an analogue control signal Y (note the operating range) and drives to the position defined. The measuring voltage U serves for the electrical display of the actuator position 0...100% and as control signal for other actuators.

Operation on Bus:

The actuator receives its digital control signal from the higher level controller via the MP-Bus and drives to the position defined. Connection U serves as communication interface and does not supply an analogue measuring voltage.

**Converter for sensors**

Connection option for a sensor (passive or active sensor or switching contact). The MP actuator serves as an analogue/digital converter for the transmission of the sensor signal via MP-Bus to the higher level system.

**Configurable device**

The factory settings cover the most common applications. Single parameters can be modified with Belimo Assistant 2.

## Product features

**Simple direct mounting**
Simple direct mounting on the rotary valve or butterfly valve with mounting flange. The mounting orientation in relation to the fitting can be selected in 90° steps.

**Manual override**
Manual override with push-button possible (the gear train is disengaged for as long as the button is pressed or remains locked).

**Adjustable angle of rotation**
Adjustable angle of rotation with mechanical end stops.

**High functional reliability**
The actuator is overload protected, requires no limit switches and automatically stops when the end stop is reached.

**Home position**
The first time the supply voltage is switched on, i.e. at the time of commissioning, the actuator carries out an adaptation, which is when the operating range and position feedback adjust themselves to the mechanical setting range.

The actuator then moves into the position defined by the control signal.

Factory setting: Y2 (counter-clockwise rotation).

**Adaptation and synchronisation**
An adaptation can be triggered manually by pressing the "Adaptation" button or with Belimo Assistant 2. Both mechanical end stops are detected during the adaptation (entire setting range).

Automatic synchronisation after pressing the manual override button is configured. The synchronisation is in the home position (0%).

The actuator then moves into the position defined by the control signal.

A range of settings can be made using Belimo Assistant 2.

## Accessories

**Tools**

| Description | Type |
|---|---|
| Service tool for wired and wireless setup, on-site operation and troubleshooting. | Belimo Assistant 2 |
| Belimo Assistant Link Bluetooth and USB to NFC and MP-Bus converter for configurable and communicative devices | LINK.10 |
| Connecting cable 5 m, A: RJ11 6/4 LINK.10, B: 6-pin for connection to service socket | ZK1-GEN |
| Connecting cable 5 m, A: RJ11 6/4 LINK.10, B: free wire end for connection to MP/PP terminal | ZK2-GEN |

**Electrical accessories**

| Description | Type |
|---|---|
| Auxiliary switch 1x SPDT add-on | S1A |
| Auxiliary switch 2x SPDT add-on | S2A |
| Feedback potentiometer 140 Ω add-on | P140A |
| Feedback potentiometer 1 kΩ add-on | P1000A |
| Feedback potentiometer 10 kΩ add-on | P10000A |
| MP-Bus power supply for MP actuators | ZN230-24MP |

**Gateways**

| Description | Type |
|---|---|
| Gateway MP to BACnet MS/TP | UK24BAC |
| Gateway MP to Modbus RTU | UK24MOD |

## Electrical installation

**Supply from isolating transformer.**

**Parallel connection of other actuators possible. Observe the performance data.**

**Direction of rotation switch is covered. Factory setting: Direction of rotation Y2.**

**Wire colours:**
1 = black
2 = red
3 = white
5 = orange

## Electrical installation

MP-Bus

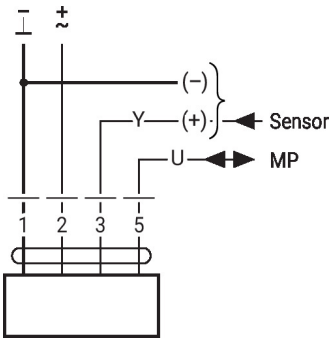


AC/DC 24 V, modulating

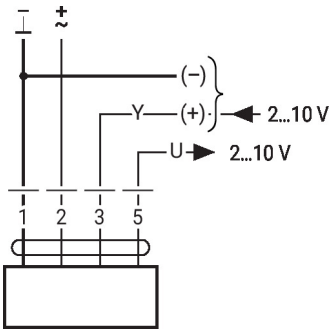


## Further electrical installations

### Functions with basic values (conventional mode)

Override control with AC 24 V with relay contacts

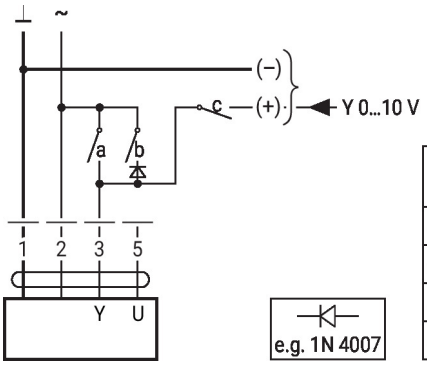


| 1 | 2 | a | b | c | |
|---|---|---|---|---|---|
| L | L | – | – | – | 0 % |
| L | L | – | L | – | ZS 50% |
| L | L | L | – | – | 100% |
| L | L | – | – | L | Y |

Override control with AC 24 V with rotary switch

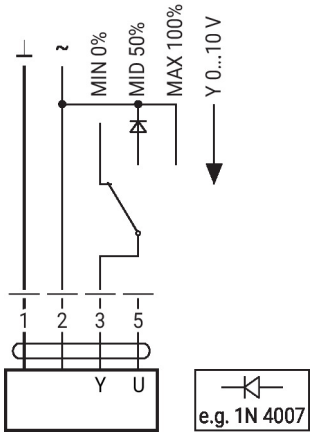


Control remotely 0...100% with positioner SG..

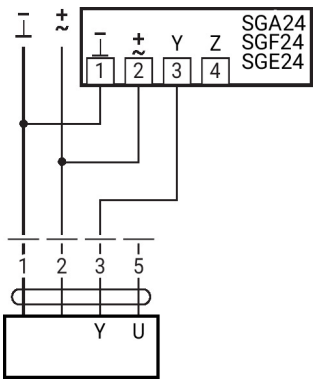


Minimum limit with positioner SG..

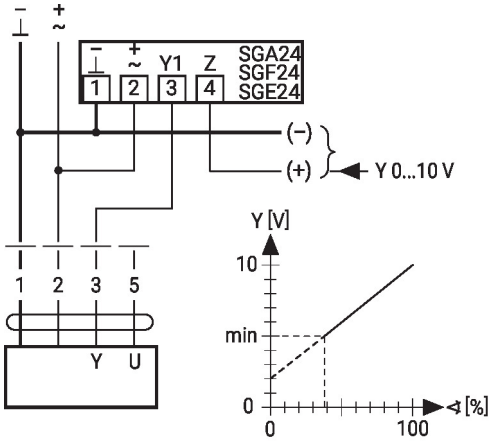

## Further electrical installations

### Functions with basic values (conventional mode)

Primary/secondary operation (position-dependent)

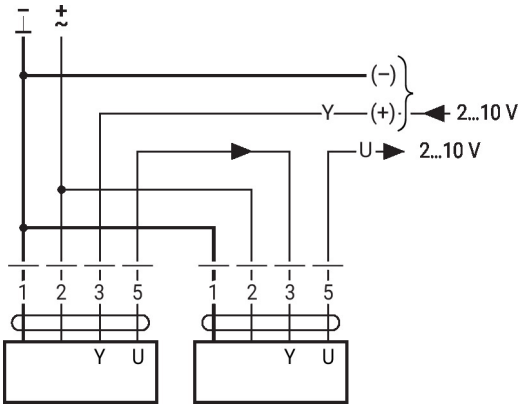


Control with 4...20 mA via external resistor

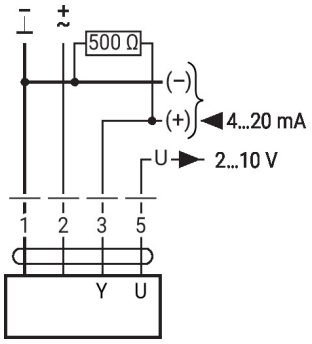


**Caution:**
The operating range must be set to DC 2...10 V.
The 500 Ohm resistor converts the 4...20 mA current signal to a voltage signal DC 2...10 V.

Functional check

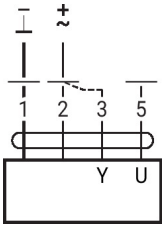


**Procedure**
1. Connect 24 V to connections 1 and 2
2. Disconnect connection 3:
– with direction of rotation L: Actuator rotates to the left
– with direction of rotation R: Actuator rotates to the right
3. Short-circuit connections 2 and 3:
– Actuator runs in opposite direction

### MP-Bus

MP-Bus Network topology

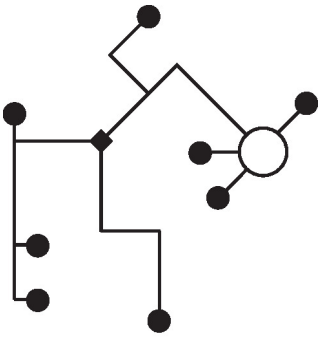

There are no restrictions for the network topology (star, ring, tree or mixed forms are permitted).
Supply and communication in one and the same 3-wire cable
• no shielding or twisting necessary
• no terminating resistors required

Connection on the MP-Bus

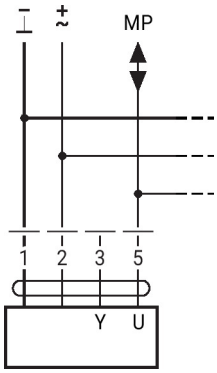


Max. 8 MP-Bus nodes

## Further electrical installations

### MP-Bus

Connection of active sensors

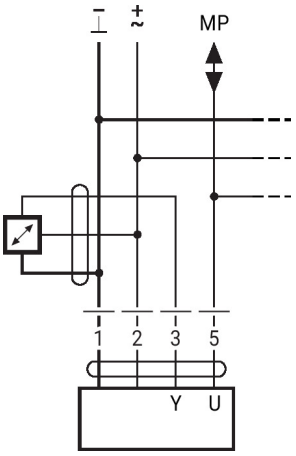


- Supply AC/DC 24 V
- Output signal 0...10 V (max. 0...32 V)
- Resolution 30 mV

Connection of external switching contact

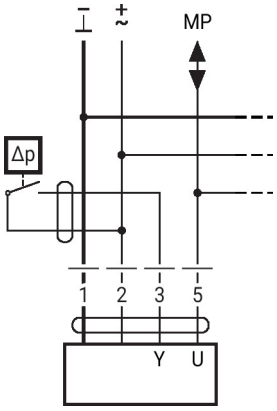


- Switching current 16 mA @ 24 V
- Start point of the operating range must be configured on the MP actuator as ≥0.5 V

Connection of passive sensors

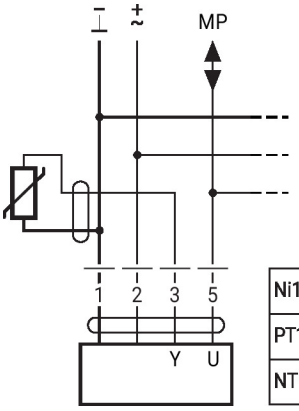


| | | |
|---|---|---|
| Ni1000 | −28...+98°C | 850...1600 Ω [2] |
| PT1000 | −35...+155°C | 850...1600 Ω [2] |
| NTC | −10...+160°C [1] | 200 Ω...60 kΩ [2] |

1) Depending on the type
2) Resolution 1 Ohm
Compensation of the measured value is recommended

### Functions with specific parameters (configuration necessary)

Override control and limiting with AC 24 V with relay contacts

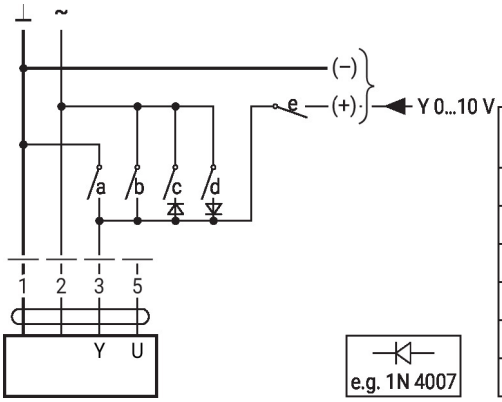


| 1 | 2 | a | b | c | d | e | |
|---|---|---|---|---|---|---|---|
| ⊸ | ⊸ | ⊸ | ⊸ | ⊸ | ⊸ | ⊸ | Close |
| ⊸ | ⊸ | ⊸ | ⊸ | ⊸ | ⊸ | ⊸ | MIN |
| ⊸ | ⊸ | ⊸ | ⊸ | ⊸ | ⊸ | ⊸ | ZS |
| ⊸ | ⊸ | ⊸ | ⊸ | ⊸ | ⊸ | ⊸ | MAX |
| ⊸ | ⊸ | ⊸ | ⊸ | ⊸ | ⊸ | ⊸ | Open |
| ⊸ | ⊸ | ⊸ | ⊸ | ⊸ | ⊸ | ⊸ | Y |

Control open/close

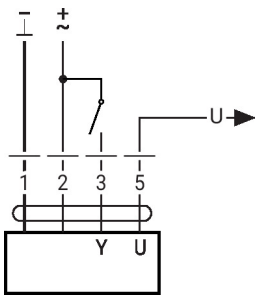

## Further electrical installations

### Functions with specific parameters (configuration necessary)

Control 3-point with AC 24 V

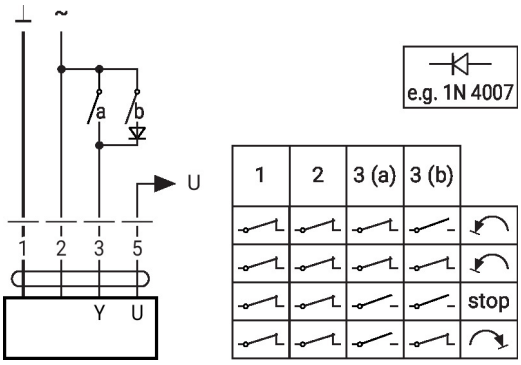


Override control and limiting with AC 24 V with rotary switch

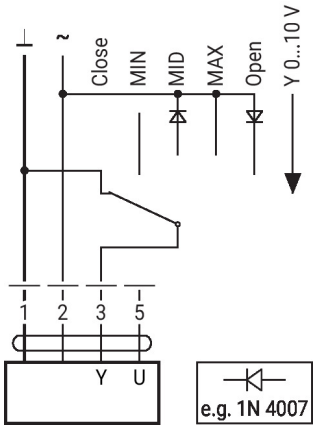


**Caution:**
The "Close" function is only guaranteed if the start point of the operating range is defined as min. 0.5 V.

## Operating controls and indicators

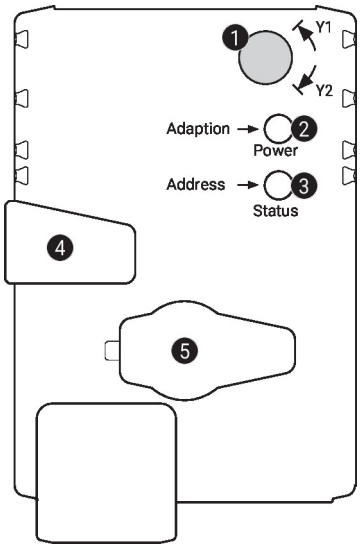


**1 Direction-of-rotation switch**

| | |
|---|---|
| Switch over: | Direction of rotation changes |

**2 Push-button and LED display green**

| | |
|---|---|
| Off: | No power supply or malfunction |
| On: | In operation |
| Press button: | Triggers angle-of-rotation adaptation, followed by standard mode |

**3 Push-button and LED display yellow**

| | |
|---|---|
| Off: | Standard mode |
| On: | Adaptation or synchronisation process active |
| Flickering: | MP-Bus communication active |
| Flashing: | Request for addressing from MP client |
| Press button: | Confirmation of the addressing |

**4 Manual override button**

| | |
|---|---|
| Press button: | Gear train disengages, motor stops, manual override possible |
| Release button: | Gear train engages, standard mode |

**5 Service plug**
For connecting configuration and service tools

**Check power supply connection**

| | |
|---|---|
| 2 Off and 3 On | Possible wiring error in power supply |

## Service

Using Belimo Assistant 2, device parameters can be modified. Belimo Assistant 2 can operate on a smartphone, tablet or PC. The available connection options vary depending on the hardware on which Belimo Assistant 2 is installed.

For more information about Belimo Assistant 2, refer to the Quick Guide – Belimo Assistant 2.

**Wired connection**

Belimo devices can be accessed by connecting Belimo Assistant Link to the USB port on a PC or laptop and to the Service Socket or MP-Bus wire on the device.

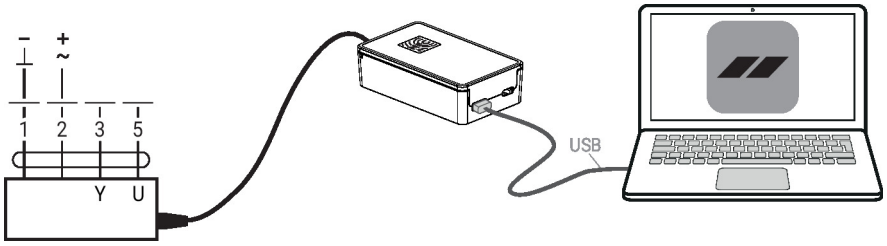


## Dimensions

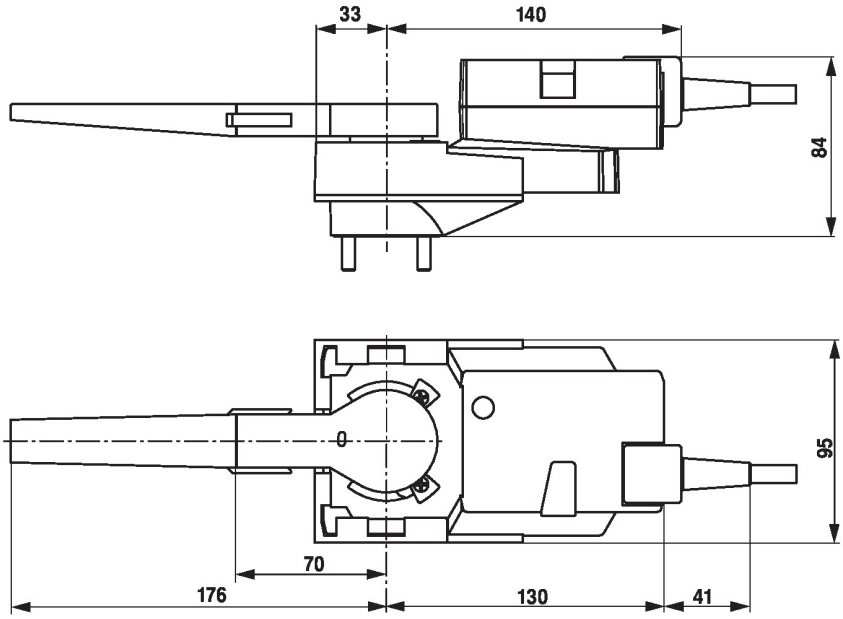


## Further documentation

- Overview MP Cooperation Partners
- Tool connections
- Introduction to MP-Bus Technology
- The complete product range for water applications
- Data sheets for ball valves
- Installation instructions for actuators and/or ball valves
- General notes for project planning
- Quick Guide – Belimo Assistant 2