Rotary actuator for butterfly valves

- Torque motor 400 Nm
- Nominal voltage AC 230 V
- Control Open/close, 3-point
- With 2 integrated auxiliary switches

Picture may differ from product

Technical data

Electrical data	Nominal voltage	AC 230 V
	Nominal voltage frequency	50/60 Hz
	Nominal voltage range	AC 207...253 V
	Power consumption in operation	297 W
	Power consumption in operation note	incl. heater
	Power consumption for wire sizing	299 VA
	Current consumption	1.3 A
	Auxiliary switch	2x SPDT, 1x 3° / 1x 87°
	Switching capacity auxiliary switch	1 mA...5 A (3 A inductive), DC 5 V...AC 250 V
	Connection supply / control	Terminals 2.5 mm^2 (Wire 2x 1.5 mm^2 or 1x 2.5 mm^2)
	Parallel operation	No
Functional data	Torque motor	400 Nm
	Manual override	temporary with handwheel (non-rotating)
	Angle of rotation	90°
	Angle of rotation note	Internal limit switch, not adjustable
	Running time motor	23 s / 90°
	Sound power level, motor	70 dB(A)
	Duty cycle value	30% (= active time 23 s / operating time 77 s)
	Position indication	Mechanical, integrated
Safety data	Protection class IEC/EN	I, protective earth (PE)
	Protection class auxiliary switch IEC/EN	I, protective earth (PE)
	Degree of protection IEC/EN	IP67
	EMC	CE according to 2014/30/EU
	Low voltage directive	CE according to 2014/35/EU
	Type of action	Type 1
	Pollution degree	4
	Ambient humidity	Max. 95% RH, non-condensing
	Ambient temperature	-30...65°C [-22...149°F]
	Storage temperature	-30...80°C [-22...176°F]
	Servicing	maintenance-free
Mechanical data	Connection flange	F10/F12
Weight	Weight	21 kg

Technical data

Materials	Housing material	Die cast aluminium

Safety notes

- This device has been designed for use in stationary heating, ventilation and air-conditioning systems and must not be used outside the specified field of application, especially in aircraft or in any other airborne means of transport.
- Caution: Mains voltage!
- Only authorised specialists may carry out installation. All applicable legal or institutional installation regulations must be complied with during installation.
- The device does not contain any parts that can be replaced or repaired by the user.
- The device contains electrical and electronic components and must not be disposed of as household refuse. All locally valid regulations and requirements must be observed.

Product features

Fields of application
The actuator is particularly suitable for utilisation in outdoor applications and is protected against the following weather conditions:
- UV radiation
- Dirt / Dust
- Rain / Snow
- Air humidity

Internal heating
An internal heater prevents condensation buildup.

Simple direct mounting
Simple direct mounting on the butterfly valve. The mounting orientation in relation to the butterfly valve can be selected in 90° (angle) increments.

Manual override
The butterfly valve can be closed (turn clockwise) and opened (turn counterclockwise) with the handwheel. The handwheel does not move while the motor is running. The butterfly valve remains in its position as long as no voltage is applied.

High functional reliability
Mechanical end stops limit the actuator to –2° and 92°. The internal limit switches interrupt the voltage supply to the motor. In addition, a motor thermostat provides overload protection and interrupts the voltage supply if the actuator is used outside of the specified temperatures.

Signalling
The integrated auxiliary switches are equipped with a gold/silver coating that permits integration both in circuits with low currents (mA range) and in ones with larger-sized currents (A range) in accordance with the specifications in the data sheet. It should be noted with this application however that the contacts can no longer be used in the milliampere range after larger currents have been applied to them, even if this has taken place only once.

Electrical installation

Caution: Mains voltage!

Electrical installation

AC 230 V, open/close, 3-point

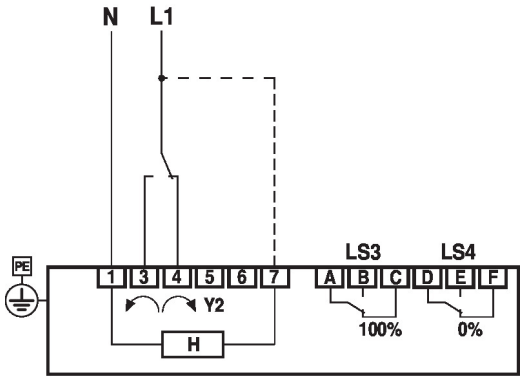

Y2 = 0%	LS3	LS4
L1 – 4	A – B, C	D – E, F

H: Internal heating (no need to connect internal heating for indoor applications with constant temperature conditions)
LS3: Auxiliary switch 100% (butterfly valve open)
LS4: Auxiliary switch 0% (butterfly valve closed)

Settings

Limit switches TC1/TC2 and angle of rotation limitation are provided with sealing varnish and may not be adjusted.

Setting cam

The setting cams for limit and auxiliary switches can be accessed by removing the housing cover.

Optionally, auxiliary switches LS4 / LS3 can be connected for signalling.

Limit switches LS2 / LS1 interrupt the voltage to the motor and are controlled by setting cams TC.. .

The setting cams turn with the spindle. The butterfly valve closes when the spindle is turning clockwise (cw) and opens when the spindle is turning counterclockwise (ccw).

TC1/TC2 with sealing varnish: limit switches are secured against adjustment

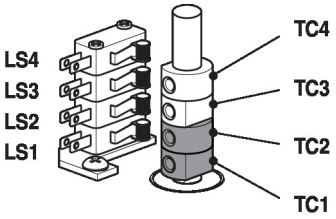

Settings of setting cams TC..

- TC4 for auxiliary switch position closed (factory setting 3°).
- TC3 for auxiliary switch position open (factory setting 87°).
- TC2 for limit switch closed (0°).
- TC1 for limit switch open (90°).

Settings

Adjusting setting cams

1) Use a 2.5 mm Allen key to unscrew the corresponding setting cams TC..
2) Turn the setting cam using the Allen key
3) Set as shown in the illustration below
4) Use the Allen key to tighten the corresponding setting cams

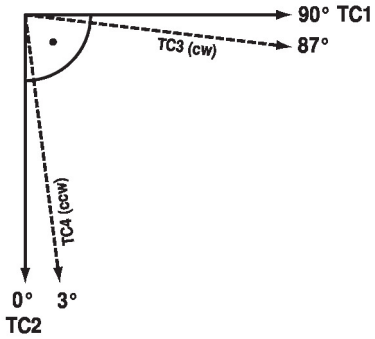

TC1: OPEN
TC2: CLOSED
TC3: Present position
TC4: Desired position

Mechanical angle-of-rotation limitation

The mechanical angle of rotation (3) is set at the factory to -2° and 92° and cannot be changed.

The handwheel is rotated by means of a worm gear in a planetary gear unit. The gearing is stopped mechanically by means of two setscrews (3).

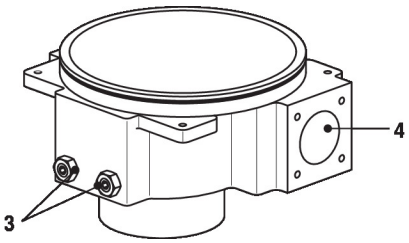

3: Angle of rotation limitation with sealing varnish:
Must not be adjusted
4: Connection handwheel

Relationship between mechanical angle of rotation limitation, limit and auxiliary switches

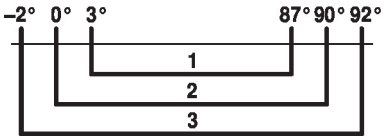

1: Auxiliary switch adjustable TC3 / TC4
2: Limit switch fix adjusted TC1 / TC2
3: Mechanical angle of rotation fix adjusted

Dimensions

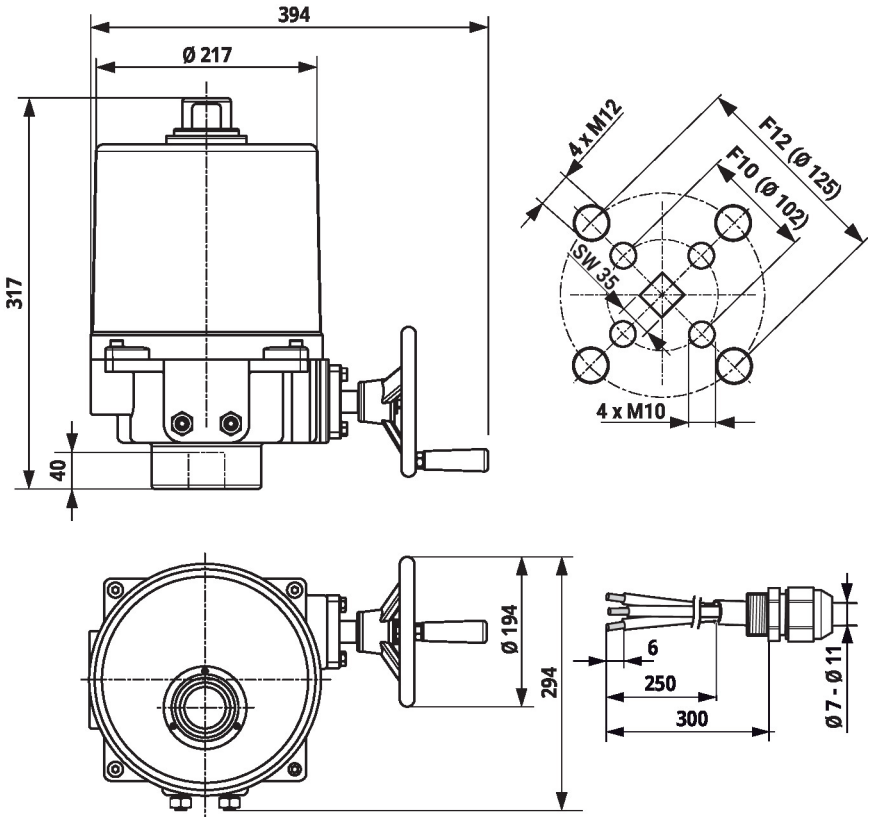

Further documentation

- Data sheets for butterfly valves
- Installation instructions for actuators and/or butterfly valves
- Notes for project planning for butterfly valves