Communicative rotary actuator fail-safe for adjusting dampers with safety function in technical building installations

- Air damper size up to approx. 0.5 m²
- Torque motor 2.5 Nm
- Nominal voltage AC/DC 24 V
- Control modulating, communicative 2...10 V variable
- Position feedback 2...10 V variable
- Communication via Belimo MP-Bus
- Conversion of sensor signals

Picture may differ from product

Technical data

Electrical data	Nominal voltage	AC/DC 24 V
	Nominal voltage frequency	50/60 Hz
	Nominal voltage range	AC 19.2...28.8 V / DC 21.6...28.8 V
	Power consumption in operation	2.5 W
	Power consumption in rest position	1 W
	Power consumption for wire sizing	4 VA
	Connection supply / control	Cable 1 m, 4x 0.75 mm²
	Parallel operation	Yes (note the performance data)
Data bus communication	Communicative control	MP-Bus
	Number of nodes	MP-Bus max. 8
Functional data	Torque motor	2.5 Nm
	Torque fail-safe	2.5 Nm
	Operating range Y	2...10 V
	Input impedance	100 kΩ
	Operating range Y variable	Start point 0.5...30 V End point 2.5...32 V
	Operating modes optional	Open/close
	Position feedback U	2...10 V
	Position feedback U note	Max. 0.5 mA
	Position feedback U variable	Start point 0.5...8 V End point 2.5...10 V
	Position accuracy	±5%
	Direction of motion motor	selectable with switch L/R
	Direction of motion variable	electronically reversible
	Direction of motion fail-safe	selectable by mounting L/R
	Direction of motion note	Y = 0 V: At switch position 0 (ccw rotation) / 1 (cw rotation)
	Manual override	No
	Angle of rotation	Max. 95°
	Angle of rotation note	adjustable starting at 37% in 2.5% steps (with mechanical end stop)
	Running time motor	150 s / 90°
	Running time fail-safe	<25 s / 90°
	Sound power level, motor	50 dB(A)
	Adaptation setting range	manual

Technical data

Functional data	Adaptation setting range variable	No action Adaptation when switched on Adaptation after using the rotation switch
	Override control	MAX (maximum position) = 100% MIN (minimum position) = 0% ZS (intermediate position, AC only) = 50%
	Override control variable	MAX = (MIN + 32%)...100% MIN = 0%...(MAX – 32%) ZS = MIN...MAX
	Mechanical interface	Universal shaft clamp 6...12.7 mm
	Position indication	Mechanical
	Service life	Min. 60'000 fail-safe positions
Safety data	Protection class IEC/EN	III, Safety Extra-Low Voltage (SELV)
	Degree of protection IEC/EN	IP42
	EMC	CE according to 2014/30/EU
	Certification IEC/EN	IEC/EN 60730-1 and IEC/EN 60730-2-14
	Hygiene test	According to VDI 6022 Part 1 / SWKI VA 104-01, cleanable and disinfectable, low emission
	Type of action	Type 1
	Rated impulse voltage supply / control	0.8 kV
	Pollution degree	3
	Ambient humidity	Max. 95% RH, non-condensing
	Ambient temperature	-30...50°C [-22...122°F]
	Storage temperature	-40...80°C [-40...176°F]
	Servicing	maintenance-free
Weight	Weight	0.68 kg

Safety notes

- This device has been designed for use in stationary heating, ventilation and air-conditioning systems and must not be used outside the specified field of application, especially in aircraft or in any other airborne means of transport.
- Outdoor application: only possible in case that no (sea) water, snow, ice, insolation or aggressive gases interfere directly with the device and that it is ensured that the ambient conditions remain within the thresholds according to the data sheet at any time.
- Only authorised specialists may carry out installation. All applicable legal or institutional installation regulations must be complied with during installation.
- The device may only be opened at the manufacturer's site. It does not contain any parts that can be replaced or repaired by the user.
- Cables must not be removed from the device.
- The device contains electrical and electronic components and must not be disposed of as household refuse. All locally valid regulations and requirements must be observed.

Product features

Operating mode

The actuator moves the damper to the operating position at the same time as tensioning the return spring. The damper is turned back to the fail-safe position by spring force when the supply voltage is interrupted.

Conventional operation:

The actuator is connected with an analogue control signal Y (note the operating range) and drives to the position defined. The measuring voltage U serves for the electrical display of the damper position 0...100% and as control signal for other actuators.

Operation on Bus:

The actuator receives its digital control signal from the higher level controller via the MP-Bus and drives to the position defined. Connection U serves as communication interface and does not supply an analogue measuring voltage.

Converter for sensors

Connection option for a sensor (active sensor or switching contact). The MFT actuator serves as an analogue/digital converter for the transmission of the sensor signal via MP-Bus to the higher level system.

Configurable device

The factory settings cover the most common applications. Single parameters can be modified with Belimo Assistant 2 or ZTH EU.

Simple direct mounting

Simple direct mounting on the damper shaft with a universal shaft clamp, supplied with an anti-rotation mechanism to prevent the actuator from rotating.

Adjustable angle of rotation

Adjustable angle of rotation with mechanical end stops.

High functional reliability

The actuator is overload protected, requires no limit switches and automatically stops when the end stop is reached.

Home position

The first time the supply voltage is switched on, i.e. at the time of commissioning, the actuator carries out a synchronisation. The synchronisation is in the home position (0%).

The actuator then moves into the position defined by the control signal.

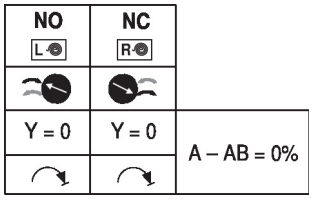

Adaptation and synchronisation

An adaptation can be triggered manually by switching the direction of rotation switch from the left to the right twice within 5s or with the PC-Tool. Both mechanical end stops are detected during the adaptation (entire setting range). Automatic synchronisation after actuating the direction of rotation switch once is programmed. The synchronisation is in the home position (0%).

The actuator then moves into the position defined by the control signal.

A range of settings can be made using Belimo Assistant 2.

Accessories

Tools

Description	Type
Service tool, with ZIP-USB function, for configurable and communicative Belimo actuators, VAV controller and HVAC performance devices	ZTH EU
Service tool for wired and wireless setup, on-site operation and troubleshooting.	Belimo Assistant 2
Adapter for Service-Tool ZTH	MFT-C
Belimo Assistant Link Bluetooth and USB to NFC and MP-Bus converter for configurable and communicative devices	LINK.10

Accessories

Electrical accessories	Description	Type
	Signal converter voltage/current 100 kΩ 4...20 mA, Supply AC/DC 24 V	Z-UIC
	Positioner for wall mounting	SGA24
	Positioner for built-in mounting	SGE24
	Positioner for front-panel mounting	SGF24
	Positioner for wall mounting	CRP24-B1

Gateways	Description	Type
	Gateway MP to BACnet MS/TP	UK24BAC
	Gateway MP to Modbus RTU	UK24MOD

Mechanical accessories	Description	Type
	Actuator arm	AH-TF
	Shaft extension 170 mm ø10 mm for damper shaft ø6...16 mm	AV6-20
	Ball joint suitable for damper crank arm KH8 / KH10	KG10A
	Ball joint suitable for damper crank arm KH8	KG8
	Damper crank arm Slot width 8.2 mm, clamping range ø10...18 mm	KH8
	Screw fastening kit	SB-TF
	Angle of rotation limiter, with end stop	ZDB-TF
	Form fit adapter 8x8 mm	ZF8-TF
	Mounting kit for linkage operation for flat and side installation	ZG-TF1
	Anti-rotation mechanism 180 mm, Multipack 20 pcs.	Z-ARS180

Electrical installation

Supply from isolating transformer.

Parallel connection of other actuators possible. Observe the performance data.

Wire colours:
1 = black
2 = red
3 = white
5 = orange

MP-Bus

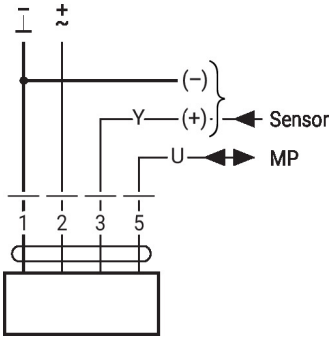

AC/DC 24 V, modulating

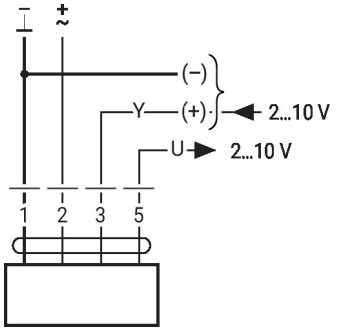

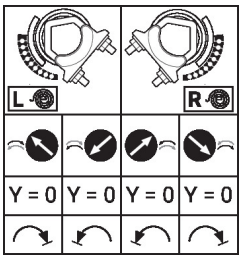

Further electrical installations

Functions with basic values (conventional mode)

Override control with AC 24 V with relay contacts

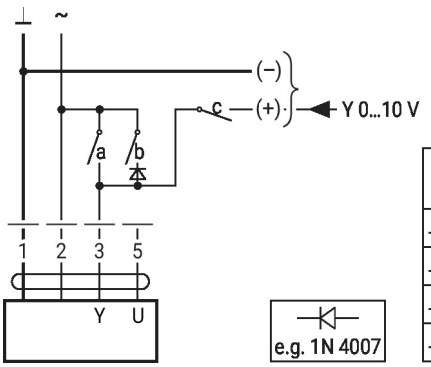

1	2	a	b	c	
⊥	⊥	–	–	–	0 %
⊥	⊥	–	⊥	–	ZS 50%
⊥	⊥	⊥	–	–	100%
⊥	⊥	–	–	⊥	Y

Override control with AC 24 V with rotary switch

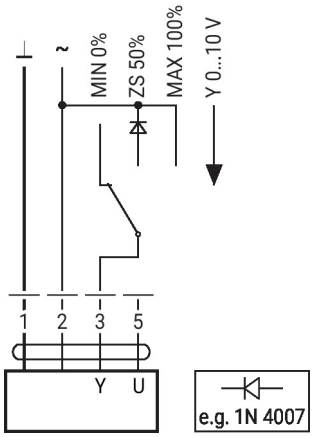

Control remotely 0...100% with positioner SG..

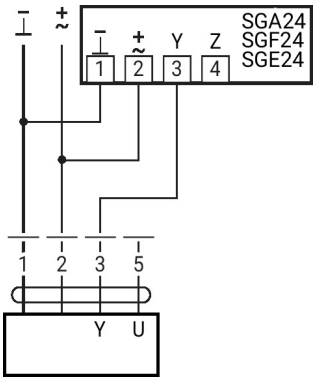

Minimum limit with positioner SG..

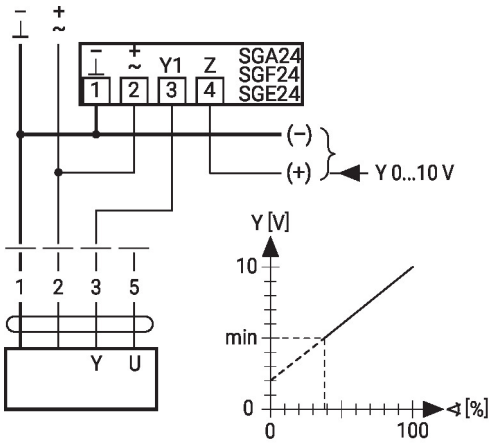

Primary/secondary operation (position-dependent)

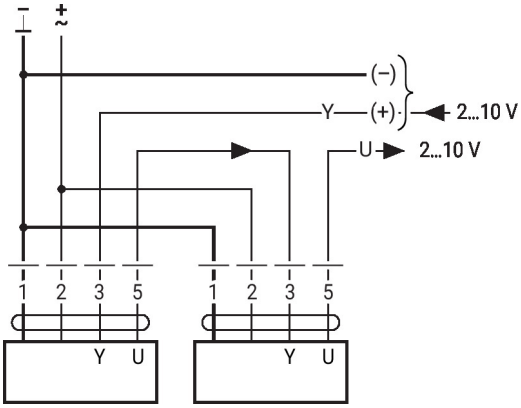

Functions with basic values (conventional mode)

Control with 4...20 mA via external resistor

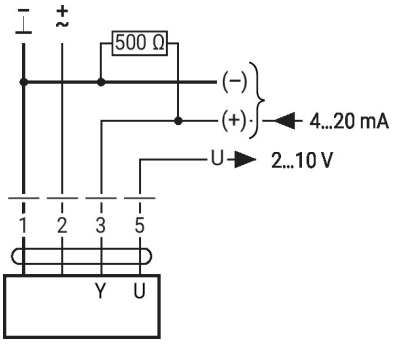

Caution:
The operating range must be set to DC 2...10 V.
The 500 Ohm resistor converts the 4...20 mA current signal to a voltage signal DC 2...10 V.

Functional check

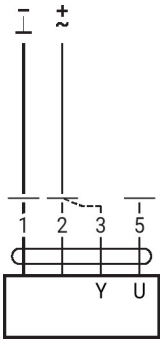

Procedure
1. Connect 24 V to connections 1 and 2
2. Disconnect connection 3:
– With direction of rotation 0: Actuator rotates to the left
– With direction of rotation 1: Actuator rotates to the right
3. Short-circuit connections 2 and 3:
– Actuator runs in opposite direction

MP-Bus

MP-Bus Network topology

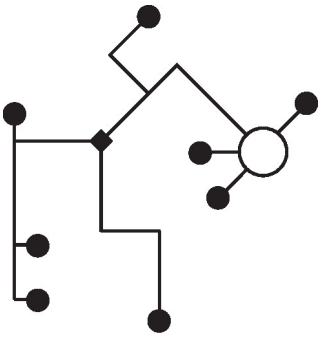

There are no restrictions for the network topology (star, ring, tree or mixed forms are permitted).
Supply and communication in one and the same 3-wire cable
• no shielding or twisting necessary
• no terminating resistors required

Connection on the MP-Bus

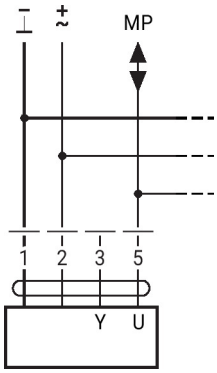

Max. 8 MP-Bus nodes

Further electrical installations

MP-Bus

Connection of active sensors

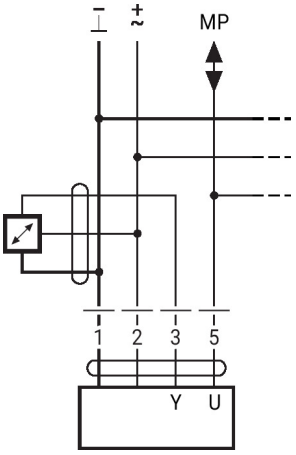

- Supply AC/DC 24 V
- Output signal 0...10 V (max. 0...32 V)
- Resolution 30 mV

Connection of external switching contact

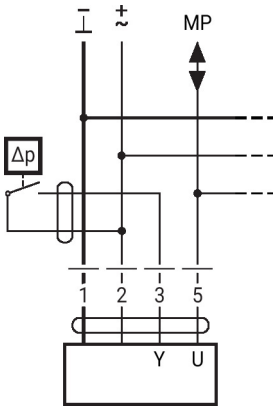

- Switching current 16 mA @ 24 V
- Start point of the operating range must be configured on the MP actuator as ≥0.5 V

Functions with specific parameters (configuration necessary)

Override control and limiting with AC 24 V with relay contacts

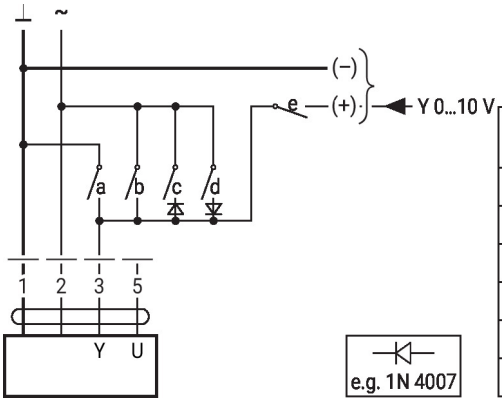

1	2	a	b	c	d	e	
							Close
							MIN
							ZS
							MAX
							Open
							Y

Control open/close

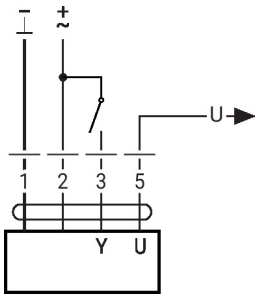

Override control and limiting with AC 24 V with rotary switch

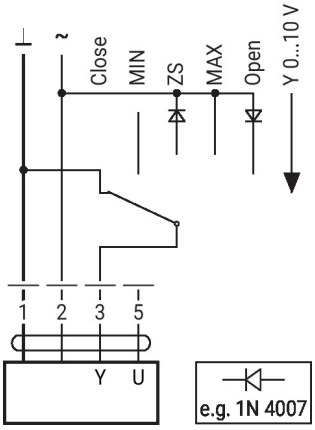

Caution:
The "Close" function is only guaranteed if the start point of the operating range is defined as min. 0.5 V.

Control 3-point with AC 24 V

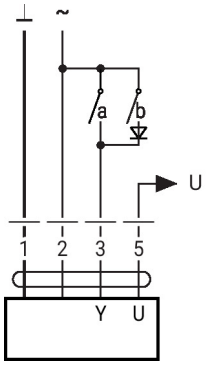

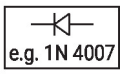

1	2	3 (a)	3 (b)	L	R
				1	1
				0	0
				stop	stop
				0	0

Operating controls and indicators

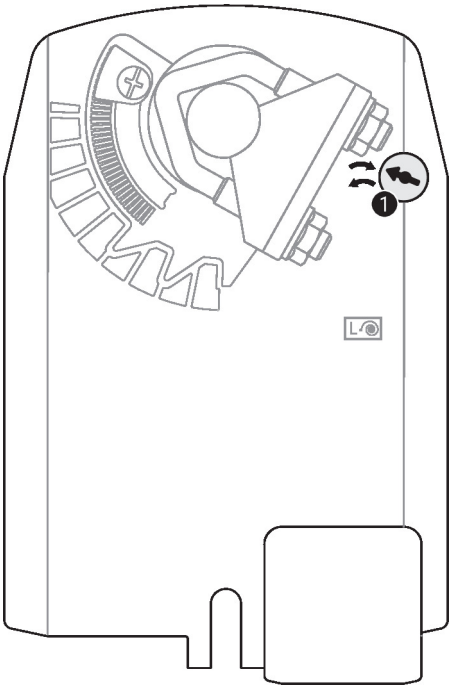

1 **MP addressing**
Move direction of rotation switch in opposite position and backwards (within 4 seconds)

Service

Wired connection

The actuator can be configured by ZTH EU via terminal connection.
For extended configuration, the PC-Tool can be connected.

Connection ZTH EU / Belimo Assistant 2

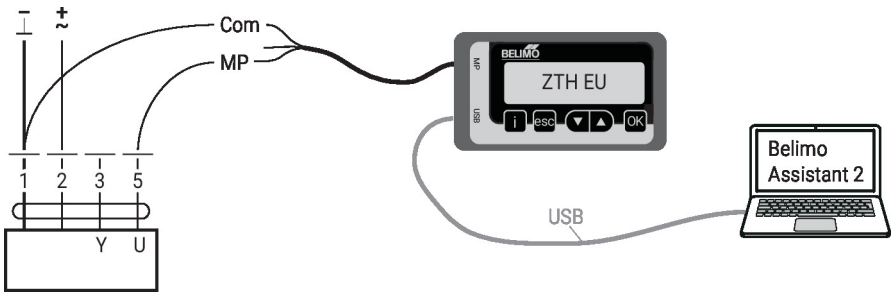

Dimensions

Spindle length

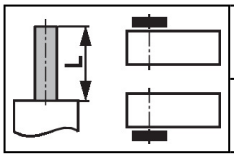	Min. 84
	Min. 20 mm [0.75"]

Clamping range

6...12.7	6...12.7

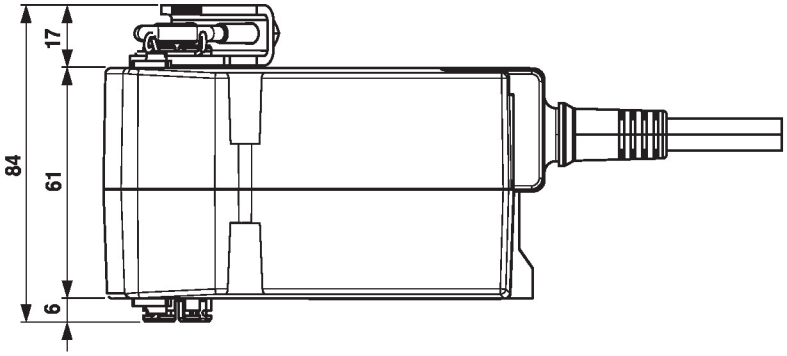

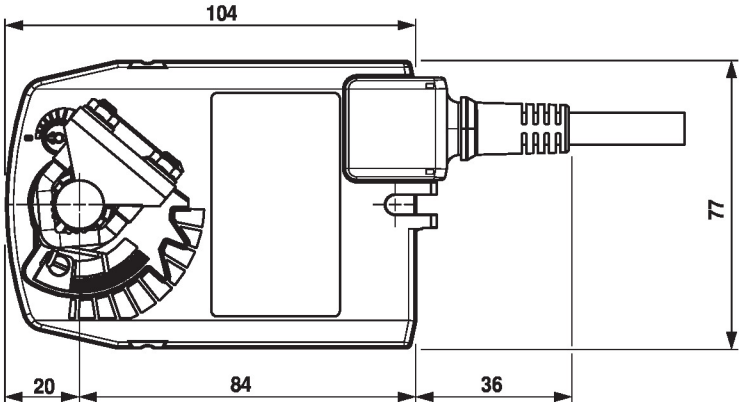

Further documentation

- Overview MP Cooperation Partners
- Tool connections
- Introduction to MP-Bus Technology
- Quick Guide – Belimo Assistant 2

Application notes

- For digital control of actuators in VAV applications patent EP 3163399 must be considered.