Spring-return actuator for fire and smoke dampers 90° in ventilation and air-conditioning systems

- Torque 20 Nm / 20 Nm
- Nominal voltage AC 230 V
- Control Open/close
- Mechanical interface Form fit 12x12 mm, continuous hollow shaft

Picture may differ from product

Technical data

Electrical data	Nominal voltage	AC 230 V
	Nominal voltage frequency	50/60 Hz
	Nominal voltage range	AC 85...264 V
	Power consumption in operation	10 W
	Power consumption in rest position	3 W
	Power consumption for wire sizing	17 VA
	Inrush current (Imax)	3.8 A @ 5 ms
	Auxiliary switch	2x SPDT
	Switching capacity auxiliary switch	1 mA...3 A (0.5 A inductive), DC 5 V...AC 250 V
	Switching points auxiliary switch	5° / 80°
	Connection supply / control	Cable 1 m, 2x 0.75 mm^2, FRNC (halogen-free)
	Connection auxiliary switch	Cable 1 m, 6x 0.75 mm^2, FRNC (halogen-free)
Functional data	Torque motor	20 Nm
	Torque fail-safe	20 Nm
	Direction of motion motor	selectable by mounting L/R
	Manual override	with position stop
	Angle of rotation	Max. 95°
	Running time motor	<60 s / 90°
	Running time fail-safe	20 s @ -10...55°C, <60 s @ -30...-10°C
	Sound power level, motor	50 dB(A)
	Sound power level, fail-safe	64 dB(A)
	Mechanical interface	Form fit 12x12 mm, continuous hollow shaft
	Position indication	Mechanical, with pointer
	Service life	Min. 60'000 safety positions
Safety data	Protection class IEC/EN	II, reinforced insulation
	Degree of protection IEC/EN	IP54 IP protection in all mounting orientations
	EMC	CE according to 2014/30/EU
	Low voltage directive	CE according to 2014/35/EU
	Certification IEC/EN	IEC/EN 60730-1 and IEC/EN 60730-2-14
	Type of action	Type 1.AA.B
	Rated impulse voltage supply / control	4 kV
	Pollution degree	3
	Ambient humidity	Max. 95% RH, non-condensing
	Ambient temperature normal operation	-30...55°C [-22...131°F]
	Ambient temperature safety operation	The safety position will be attained up to max. 75°C [167°F]
	Storage temperature	-40...80°C [-40...176°F]

Technical data

Safety data	Servicing	maintenance-free
Weight	Weight	3.0 kg

Safety notes

- The device must not be used outside the specified field of application, especially not in aircraft or in any other airborne means of transport.
- The actuator is adapted and installed on the fire and smoke damper by the damper manufacturer. For this reason, the actuator is only supplied directly to safety damper manufacturers. The manufacturer then bears full responsibility for the proper functioning of the damper.
- The two switches integrated in the actuator are to be operated either on mains voltage or on safety extra-low voltage. The combination mains voltage/safety extra-low voltage is not permitted.
- Outdoor application: Only possible if no (sea) water, snow, ice, sunlight or aggressive gases act directly on the device and if it is ensured that the ambient conditions remain within the limit values specified in the data sheet at all times.
- Cables must not be removed from the device.
- The device may only be opened at the manufacturer's site. It does not contain any parts that can be replaced or repaired by the user.
- The device contains electrical and electronic components and must not be disposed of as household refuse. All locally valid regulations and requirements must be observed.
- Only operate the manual override when the power is off.

Product features

Operating mode
The actuator moves the damper to the operating position at the same time as tensioning the return spring. The damper is turned back to the safety position by spring energy when the supply voltage is interrupted.

Safety Position Lock™
The Safety Position Lock™ reliably holds the fire damper in the safety position in case of fire, ensuring maximum safety. The technical solution for this function for BFL, BFN and BFA actuators is patented.

Manual override
In unpowered state, the actuator can be operated manually with one hand and fixed in any required position by using the locking switch. It can be unlocked manually or automatically by applying the supply voltage.

Innovative motorisation
The actuator uses the powerful Belimo M600 microchip in combination with the INFORM method. It provides the full starting torque from a standstill with high precision (sensorless INFORM-Drive by Prof. Schrödl).

Product features

Signalling

Two microswitches with fixed settings are installed in the actuator for indicating the damper end positions. The electrical contacts of these microswitches are equipped with a gold/silver coating that permits integration both in circuits with low currents (mA range) and in ones with larger-sized currents (A range) in accordance with the specifications in the data sheet. It should be noted with this application however that the contacts can no longer be used in the milliampere range after larger currents have been applied to them, even if this has taken place only once.

The position of the damper blade can be read off a notch in the hollow shaft or on a mechanical position indicator.

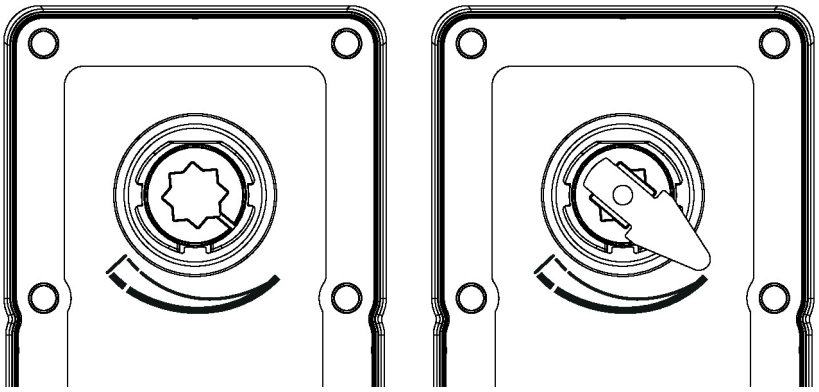

Piggy-back

The BFA actuator series is suitable for so-called piggy-back operation, in which two identical actuators are mechanically coupled to increase the available torque. Specific technical data and application requirements apply to piggy-back operation, which are described in the “Piggy-back” application guide (see www.belimo.com). In this case, this guide takes precedence over the information in this technical data sheet for the individual actuator and limits its validity for piggy-back operation accordingly. The design, validation/verification and approval of the complete solution are the responsibility of the user, i.e. the manufacturer of the damper.

Standards / Regulations

The design of the actuator is based on the specific requirements from the European standards:

- EN 15650 Ventilation for buildings – Fire dampers

- EN 1366-2 Fire resistance tests on service installations

(Part 2: Fire dampers)

- EN 13501-3 Fire classification of construction products and building elements - Part 3: Classification using data from fire resistance tests on products and elements used in building service installations: fire resisting ventilation ducts and fire dampers and/or power, control and communication cables

Recommendation for application

The regular operational check (open/close control of the fire damper) enhances the safety of people, animals, property and the environment. Unless other requirements are stipulated – e.g. in the damper manufacturer's operating instructions – Belimo recommends the performance of a monthly operational check. Fire damper actuators from Belimo are designed in accordance with service life specifications contained in the technical data sheet for regular operational checks. Notes for regular operational checks can be found in the European Product Standard for Fire Dampers (EN 15650) under "Maintenance information".

Parts included

Hand crank
Pointer
Protective bag

Accessories

Electrical accessories

Description	Type
Communication and power supply unit for fire damper actuators 230 V	BKN230-MOD

Accessories

Description	Type
Auxiliary switch 2x SPDT	SN2-C7
Cable set with plug 0.5 m for communication and power supply unit	ZST-BS

Mechanical accessories

Description	Type
Bracket for SN2-C7 for BFL, BFN, BFA, BEN, BEE	ZSN-B
Adapter, for form fit with clamp for round shaft 10...20 mm / square 10...16 mm	ZK-BFA
Pointer 12x12 mm	ZZ12-B
Hand crank 40 mm	ZKN1-B
Hand crank 63 mm	ZKN2-B
Protective bag with wire, Multipack 100 pcs.	ZSDG-B.1
Hand crank, flexible	ZFHC-B

Electrical installation

Caution: Mains voltage!

Parallel connection of other actuators possible. Observe the performance data.

Combination of mains voltage and safety extra-low voltage not permitted at the two auxiliary switches.

Wire colours:
1 = blue
2 = brown
S1 = violet
S2 = red
S3 = white
S4 = orange
S5 = pink
S6 = grey

AC 230 V, open/close

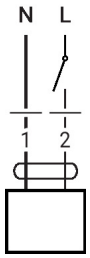

Auxiliary switch

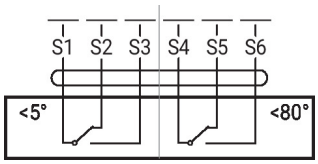

Dimensions

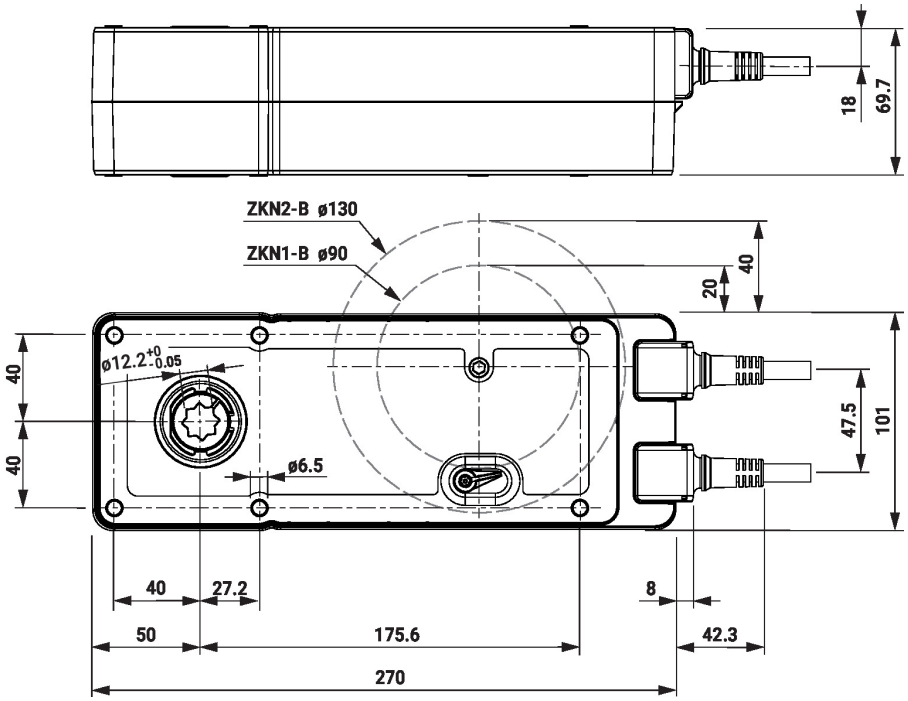
18
69.7
ZKN2-B ø130
ZKN1-B ø90
20
40
ø12.2+0 -0.05
40
40
ø6.5
47.5
101
40
27.2
8
50
175.6
42.3
270