PI flow limiter valve, 2-way, Internal thread

- For closed water systems
- For water-side open/close control of fan coils, heating and cooling ceilings

Picture may differ from product

Type overview

Type	DN	Rp ["]	V'nom [l/s]	V'nom [l/h]	V'nom [m³/h]	PN
C215QFLH-C	15	1/2	0.08	290	0.29	25
C215QFLH-D	15	1/2	0.13	470	0.47	25
C215QFLH-E	15	1/2	0.18	650	0.65	25
C215QFLH-F0	15	1/2	0.26	940	0.94	25
C215QFLH-F	15	1/2	0.36	1300	1.3	25
C220QFLH-F6	20	3/4	0.33	1200	1.2	25
C220QFLH-G0	20	3/4	0.42	1500	1.5	25
C220QFLH-G	20	3/4	0.52	1900	1.9	25
C220QFLH-H0	20	3/4	0.65	2350	2.35	25
C225QFLH-H	25	1	0.81	2900	2.9	25
C225QFLH-J	25	1	1.00	3600	3.6	25

Technical data

Functional data	Fluid	Water
	Fluid temperature	2...80°C [36...176°F]
	Differential pressure	20...280 kPa
	Close-off pressure Δps	520 kPa
	Differential pressure Δpmax	280 kPa
	Differential pressure note	50 kPa for low-noise operation
	Pressure stability	±5% (with a pressure value of 100...280 kPa)
	Leakage rate	air-bubble tight, leakage rate A (EN 12266-1)
	Flow setting	See installation instruction
	Angle of rotation	90°
	Pipe connection	Internal thread according to ISO 7-1
	Installation orientation	upright to horizontal (in relation to the spindle)
	Servicing	maintenance-free
Materials	Valve body	Brass
	Closing element	chrome-plated brass
	Spindle	Brass
	Spindle seal	EPDM O-ring
	Seat	PTFE, O-ring EPDM
Terms	Abbreviations	V'nom = nominal flow with valve completely opened

Safety notes

- The valve has been designed for use in stationary heating, ventilation and air-conditioning systems and must not be used outside the specified field of application, especially in aircraft or in any other airborne means of transport.
- Only authorised specialists may carry out installation. All applicable legal or institutional installation regulations must be complied with during installation.
- The valve does not contain any parts that can be replaced or repaired by the user.
- When back flushing the valve, the differential pressure should not exceed 150 kPa.
- The valve may not be disposed of as household refuse. All locally valid regulations and requirements must be observed.
- When determining the flow rate characteristic of controlled devices, the recognised directives must be observed.

Product features

Operating mode

The open/close ball valve is adjusted by a rotary actuator. The actuator is controlled by an open/close signal. The ball valve opens counterclockwise and closes clockwise.

Constant flow volume

With a differential pressure of 20...280 kPa, a constant flow volume is achieved thanks to the integrated flow limiter. Even with pressure variations, the flow rate remains constant when open to an angle of 90° and ensures a steady control.

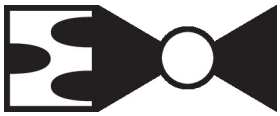

Accessories

Mechanical accessories

Description	Type
Spindle extension CQ	ZCQ-E
Pipe connector for ball valve with internal thread DN 15 Rp 1/2"	ZR2315
Pipe connector for ball valve with internal thread DN 20 Rp 3/4"	ZR2320
Pipe connector for ball valve with internal thread DN 25 Rp 1"	ZR2325

Installation notes

Permissible installation orientation

The ball valve can be installed upright to horizontal. The ball valve may not be installed in a hanging position, i.e. with the spindle pointing downwards.

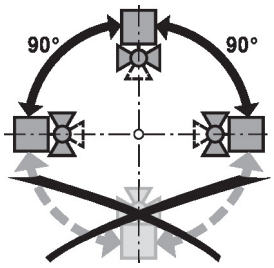

Installation in return

Installation in the return is recommended.

Water quality requirements

The water quality requirements specified in VDI 2035 must be adhered to.

Belimo valves are regulating devices. For the valves to function correctly in the long term, they must be kept free from particle debris (e.g. welding beads during installation work). The installation of a suitable strainer is recommended.

Installation notes

Servicing

Ball valves and rotary actuators are maintenance-free.

Before any service work on the control element is carried out, it is essential to isolate the rotary actuator from the power supply (by unplugging the electrical cable if necessary). Any pumps in the part of the piping system concerned must also be switched off and the appropriate slide valves closed (allow all components to cool down first if necessary and always reduce the system pressure to ambient pressure level).

The system must not be returned to service until the ball valve and the rotary actuator have been correctly reassembled in accordance with the instructions and the pipeline has been refilled by professionally trained personnel.

Flow direction

The direction of flow, specified by an arrow on the housing, is to be complied with, since otherwise the ball valve could become damaged. Please ensure that the ball is in the correct position (marking on the spindle).

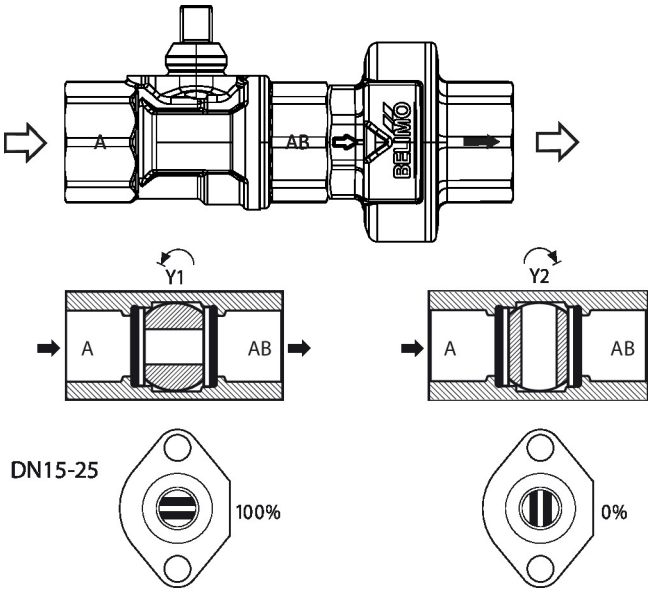

Flow setting

At the CQ-actuator the end stop clip has to be removed. This in order to get the angle of rotation of 90°, which is needed for the open/close functionality.

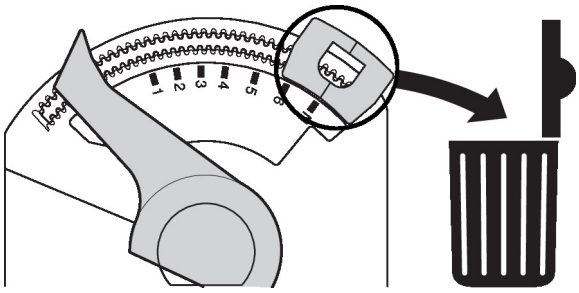

Remove end stop clip

Dimensions

Dimensional drawings

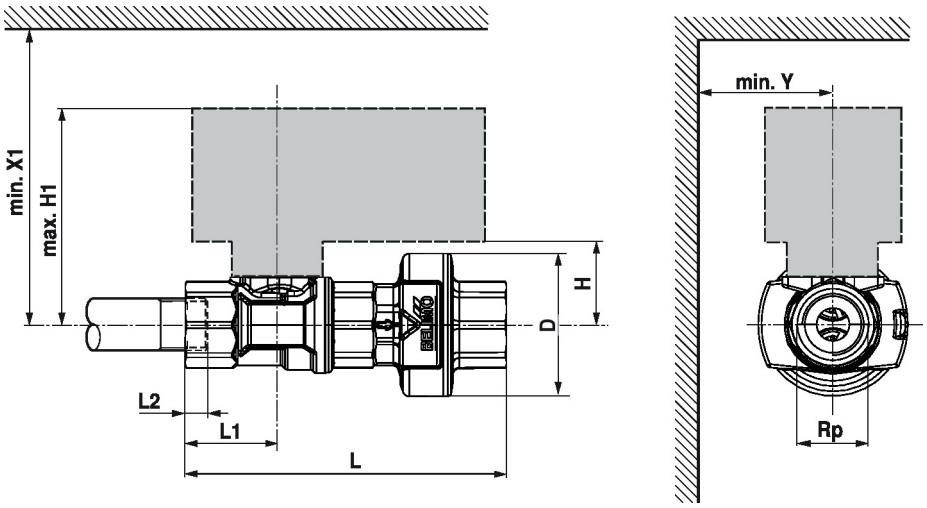

L2: Maximum screwing depth.

Type	DN	Rp [“]	L [mm]	L1 [mm]	L2 [mm]	H [mm]	H1 [mm]	D [mm]	X1 [mm]	Y [mm]	kg
C215QFLH-C	15	1/2	100	29	13	24.5	69	44	110	35	0.34
C215QFLH-D	15	1/2	100	29	13	24.5	69	44	110	35	0.34
C215QFLH-E	15	1/2	100	29	13	24.5	69	44	110	35	0.34
C215QFLH-F0	15	1/2	100	29	13	24.5	69	44	110	35	0.34
C215QFLH-F	15	1/2	100	29	13	24.5	69	44	110	35	0.34
C220QFLH-F6	20	3/4	111	35	14	26.5	71	46	110	35	0.45
C220QFLH-G0	20	3/4	111	35	14	26.5	71	46	110	35	0.45
C220QFLH-G	20	3/4	111	35	14	26.5	71	46	110	35	0.45
C220QFLH-H0	20	3/4	111	35	14	26.5	71	46	110	35	0.45
C225QFLH-H	25	1	128	44	17	46	130	49	200	75	0.76
C225QFLH-J	25	1	128	44	17	46	130	49	200	75	0.76