Rotary actuator for rotary valves and butterfly valves

- Torque motor 40 Nm
- Nominal voltage AC/DC 24 V
- Control Open/close
- Running time motor 35 s

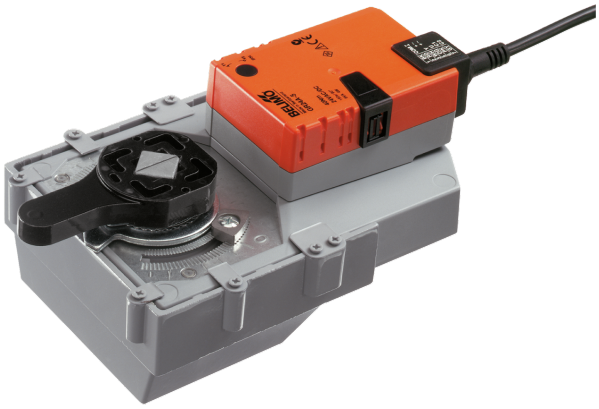

Picture may differ from product

## Technical data

| | | |
|---|---|---|
| **Electrical data** | Nominal voltage | AC/DC 24 V |
| | Nominal voltage frequency | 50/60 Hz |
| | Nominal voltage range | AC 19.2...28.8 V / DC 21.6...28.8 V |
| | Power consumption in operation | 8 W |
| | Power consumption in rest position | 2.5 W |
| | Power consumption for wire sizing | 11 VA |
| | Connection supply / control | Cable 1 m, 3x 0.75 $mm^2$ |
| | Parallel operation | Yes (note the performance data) |
| **Functional data** | Torque motor | 40 Nm |
| | Manual override | with push-button, can be locked |
| | Running time motor | 35 s / 90° |
| | Sound power level, motor | 60 dB(A) |
| | Position indication | Mechanical, integrated |
| **Safety data** | Protection class IEC/EN | III, Safety Extra-Low Voltage (SELV) |
| | Power source UL | Class 2 Supply |
| | Degree of protection IEC/EN | IP54 |
| | Degree of protection NEMA/UL | NEMA 2 |
| | Housing | UL Enclosure Type 2 |
| | EMC | CE according to 2014/30/EU |
| | Certification IEC/EN | IEC/EN 60730-1 and IEC/EN 60730-2-14 |
| | UL Approval | cULus according to UL60730-1A, UL60730-2-14 and CAN/CSA E60730-1<br>The UL marking on the actuator depends on the production site, the device is UL-compliant in any case |
| | Type of action | Type 1 |
| | Rated impulse voltage supply / control | 0.8 kV |
| | Pollution degree | 3 |
| | Ambient humidity | Max. 95% RH, non-condensing |
| | Ambient temperature | -30...50°C [-22...122°F] |
| | Storage temperature | -40...80°C [-40...176°F] |
| | Servicing | maintenance-free |
| **Mechanical data** | Connection flange | F05 |
| **Weight** | Weight | 2.3 kg |

## Safety notes

- This device has been designed for use in stationary heating, ventilation and air-conditioning systems and must not be used outside the specified field of application, especially in aircraft or in any other airborne means of transport.
- Outdoor application: only possible in case that no (sea) water, snow, ice, insolation or aggressive gases interfere directly with the device and that it is ensured that the ambient conditions remain within the thresholds according to the data sheet at any time.
- Only authorised specialists may carry out installation. All applicable legal or institutional installation regulations must be complied with during installation.
- The switch for changing the direction of rotation may only be operated by authorised specialists. The direction of rotation must not in particular be reversed in a frost protection circuit.
- The device may only be opened at the manufacturer's site. It does not contain any parts that can be replaced or repaired by the user.
- Cables must not be removed from the device.
- The device contains electrical and electronic components and must not be disposed of as household refuse. All locally valid regulations and requirements must be observed.

## Product features

**Simple direct mounting**
Simple direct mounting on the rotary valve or butterfly valve with mounting flange. The mounting orientation in relation to the fitting can be selected in 90° steps.

**Manual override**
Manual override with push-button possible (the gear train is disengaged for as long as the button is pressed or remains locked).

**Adjustable angle of rotation**
Adjustable angle of rotation with mechanical end stops.

**High functional reliability**
The actuator is overload protected, requires no limit switches and automatically stops when the end stop is reached.

## Accessories

**Electrical accessories**

| Description | Type |
|---|---|
| Auxiliary switch 1x SPDT add-on | S1A |
| Auxiliary switch 2x SPDT add-on | S2A |
| Feedback potentiometer 140 Ω add-on | P140A |
| Feedback potentiometer 1 kΩ add-on | P1000A |
| Feedback potentiometer 10 kΩ add-on | P10000A |

## Electrical installation

**Supply from isolating transformer.**
**Parallel connection of other actuators possible. Observe the performance data.**
**Direction of rotation switch is covered. Factory setting: Direction of rotation Y2.**

**Wire colours:**
1 = black
2 = red
3 = white

## Electrical installation

AC/DC 24 V, open/close

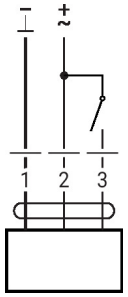


| 1 | 2 | 3 | |
|---|---|---|---|
| | | | A - AB = 0% |
| | | | A - AB = 100% |

## Dimensions

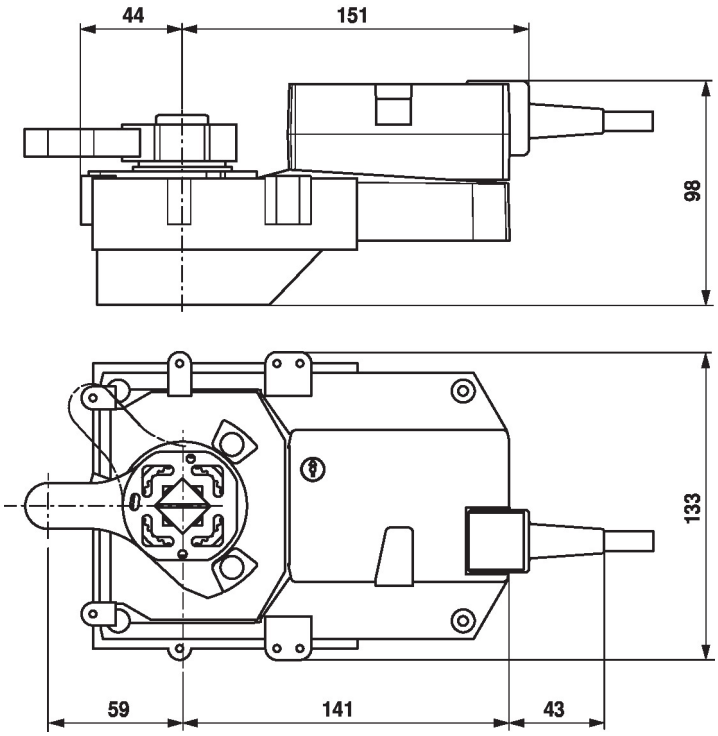


## Further documentation

- The complete product range for water applications
- Data sheets for rotary valves and butterfly valves
- Installation instructions for actuators and/or rotary valves and butterfly valves
- General notes for project planning