Communicative linear actuator adjusting dampers and slide valves in technical building installations

- Air damper size up to approx. 1 m²
- Actuating force 150 N
- Nominal voltage AC/DC 24 V
- Control modulating, communicative 2...10 V variable
- Position feedback 2...10 V variable
- Length of stroke Max. 100 mm, adjustable in 20 mm increments
- Communication via Belimo MP-Bus
- Conversion of sensor signals

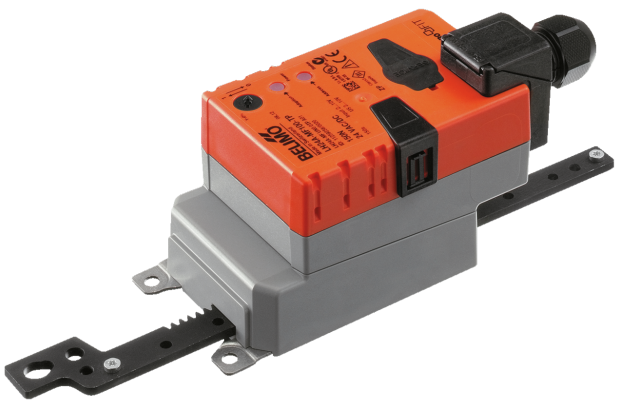

Picture may differ from product

Technical data

Electrical data	Nominal voltage	AC/DC 24 V
	Nominal voltage frequency	50/60 Hz
	Nominal voltage range	AC 19.2...28.8 V / DC 21.6...28.8 V
	Power consumption in operation	2.5 W
	Power consumption in rest position	1.2 W
	Power consumption for wire sizing	5 VA
	Connection supply / control	Terminals 4 mm² (cable ø4...10 mm, 4-wire)
	Parallel operation	Yes (note the performance data)
Data bus communication	Communicative control	MP-Bus
	Number of nodes	MP-Bus max. 8
Functional data	Actuating force motor	150 N
	Actuating force variable	25%, 50%, 75% reduced
	Operating range Y	2...10 V
	Input impedance	100 kΩ
	Operating range Y variable	Start point 0.5...30 V End point 2.5...32 V
	Operating modes optional	Open/close 3-point (AC only) Modulating (DC 0...32 V)
	Position feedback U	2...10 V
	Position feedback U note	Max. 0.5 mA
	Position feedback U variable	Start point 0.5...8 V End point 2.5...10 V
	Position accuracy	±5%
	Direction of motion motor	selectable with switch
	Direction of motion variable	electronically reversible
	Direction of motion note	Y = 0 V: with switch 0 (retracted) / 1 (extended)
	Manual override	with push-button, can be locked
	Stroke	100 mm
	Length of stroke	Max. 100 mm, adjustable in 20 mm increments
	Stroke limitation	can be limited on both sides with mechanical end stops
	Running time motor	150 s / 100 mm
	Running time motor variable	70...270 s / 100 mm
	Sound power level, motor	45 dB(A)
	Adaptation setting range	manual

Technical data

Functional data	Adaptation setting range variable	No action Adaptation when switched on Adaptation after pushing the manual override button
	Override control	MAX (maximum position) = 100% MIN (minimum position) = 0% ZS (intermediate position, AC only) = 50%
	Override control variable	MAX = (MIN + 32%)...100% MIN = 0%...(MAX – 32%) ZS = MIN...MAX
Safety data	Protection class IEC/EN	III, Safety Extra-Low Voltage (SELV)
	Power source UL	Class 2 Supply
	Degree of protection IEC/EN	IP54
	Degree of protection NEMA/UL	NEMA 2
	Housing	UL Enclosure Type 2
	EMC	CE according to 2014/30/EU
	Certification IEC/EN	IEC/EN 60730-1 and IEC/EN 60730-2-14
	UL Approval	cULus according to UL60730-1A, UL60730-2-14 and CAN/CSA E60730-1 The UL marking on the actuator depends on the production site, the device is UL-compliant in any case
	Hygiene test	According to VDI 6022 Part 1
	Type of action	Type 1
	Rated impulse voltage supply / control	0.8 kV
	Pollution degree	3
	Ambient humidity	Max. 95% RH, non-condensing
	Ambient temperature	-30...50°C [-22...122°F]
	Storage temperature	-40...80°C [-40...176°F]
	Servicing	maintenance-free
Weight	Weight	0.48 kg

Safety notes

- This device has been designed for use in stationary heating, ventilation and air-conditioning systems and must not be used outside the specified field of application, especially in aircraft or in any other airborne means of transport.
- Outdoor application: Only possible if no (sea) water, snow, ice, sunlight or aggressive gases act directly on the device and if it is ensured that the ambient conditions remain within the limit values specified in the data sheet at all times.
- Only authorised specialists may carry out installation. All applicable legal or institutional installation regulations must be complied with during installation.
- The device may only be opened at the manufacturer's site. It does not contain any parts that can be replaced or repaired by the user.
- The rotary supports and coupling pieces available as accessories must always be used if transverse forces are likely. In addition, the actuator must not be tightly bolted to the application. It must remain movable via the rotary support (refer to «Installation notes»).
- If the actuator is exposed to severely contaminated ambient air, appropriate precautions must be taken on the system side. Excessive deposits of dust, soot etc. can prevent the gear rod from being extended and retracted correctly.
- If not installed horizontally, the manual override button may only be actuated when there is no pressure on the gear rod.
- To calculate the actuating force required for air dampers and slide valves, the specifications supplied by the damper manufacturers concerning the cross- section and the design, as well as the installation situation and the ventilation conditions must be observed.
- If a rotary support and/or coupling piece is used, actuation force losses are to be expected.
- The device contains electrical and electronic components and must not be disposed of as household refuse. All locally valid regulations and requirements must be observed.

Product features

Operating mode

Conventional operation:

The actuator is connected with an analogue control signal Y (note the operating range) and drives to the position defined. The measuring voltage U serves for the electrical display of the damper position 0...100% and as control signal for other actuators.

Operation on Bus:

The actuator receives its digital control signal from the higher level controller via the MP-Bus and drives to the position defined. Connection U serves as communication interface and does not supply an analogue measuring voltage.

The actuator has a seal closing function. The mechanical end stop is actively approached as soon as the control signal < DC 2.1 V or > DC 9.9 V. As soon as the control signal is again > DC 2.2 V or < DC 9.8 V, the actuator drives to the position defined by the control signal in the adapted range.

Converter for sensors

Connection option for a sensor (passive or active sensor or switching contact). The MP actuator serves as an analogue/digital converter for the transmission of the sensor signal via MP-Bus to the higher level system.

Configurable device

The factory settings cover the most common applications. Single parameters can be modified with Belimo Assistant 2.

Simple direct mounting

The actuator can be directly connected with the application using the enclosed screws. The head of the gear rod is connected to the moving part of the ventilating application individually on the mounting side or with the Z-KS2 coupling piece provided.

Manual override

Manual override with push-button possible (the gear train is disengaged for as long as the button is pressed or remains locked).

Adjustable stroke

If a stroke limitation will be adjusted, the mechanical operating range on this side of the gear rod can be used starting with an extension length of 20 mm and then can be limited respectively in increments of 20 mm by means of mechanical end stops Z-AS2.

High functional reliability

The actuator is overload protected, requires no limit switches in intermediate positions and automatically stops when the end stop is reached (at rest).

Product features

Home position

The first time the supply voltage is switched on, i.e. at the time of commissioning, the actuator carries out a synchronisation. The synchronisation is in the home position (0%).

The actuator then moves into the position defined by the control signal.

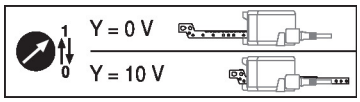

Adaptation and synchronisation

An adaptation can be triggered manually by pressing the "Adaptation" button or with Belimo Assistant 2. Both mechanical end stops are detected during the adaptation (entire setting range).

Automatic synchronisation after pressing the manual override button is configured. The synchronisation is in the home position (0%).

The actuator then moves into the position defined by the control signal.

A range of settings can be made using Belimo Assistant 2.

Accessories

Tools

Description	Type
Service tool for wired and wireless setup, on-site operation and troubleshooting.	Belimo Assistant 2
Belimo Assistant Link Bluetooth and USB to NFC and MP-Bus converter for configurable and communicative devices	LINK.10
Connecting cable 5 m, A: RJ11 6/4 LINK.10, B: 6-pin for connection to service socket	ZK1-GEN
Connecting cable 5 m, A: RJ11 6/4 LINK.10, B: free wire end for connection to MP/PP terminal	ZK2-GEN

Electrical accessories

Description	Type
Signal converter voltage/current 100 kΩ 4...20 mA, Supply AC/DC 24 V	Z-UIC
Positioner for wall mounting	SGA24
Positioner for built-in mounting	SGE24
Positioner for front-panel mounting	SGF24
Positioner for wall mounting	CRP24-B1
MP-Bus power supply for MP actuators	ZN230-24MP

Gateways

Description	Type
Gateway MP to BACnet MS/TP	UK24BAC
Gateway MP to Modbus RTU	UK24MOD

Mechanical accessories

Description	Type
End stop kit, Multipack 20 pcs.	Z-AS2
Rotary support, for linear actuator, for compensation of transverse forces	Z-DS1
Coupling piece M6	Z-KS2
Terminal protection IP54, Multipack 20 pcs.	Z-TP

Electrical installation

Supply from isolating transformer.

Parallel connection of other actuators possible. Observe the performance data.

Electrical installation

MP-Bus

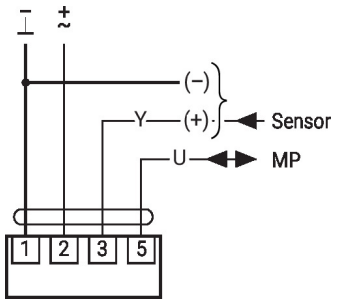

AC/DC 24 V, modulating

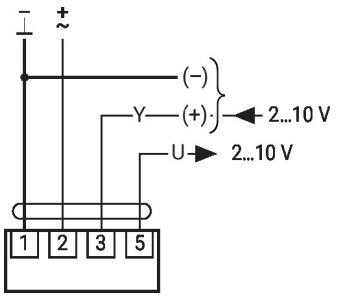

1	2	3		
		2 V		
		10 V		

Further electrical installations

Functions with basic values (conventional mode)

Override control with AC 24 V with relay contacts

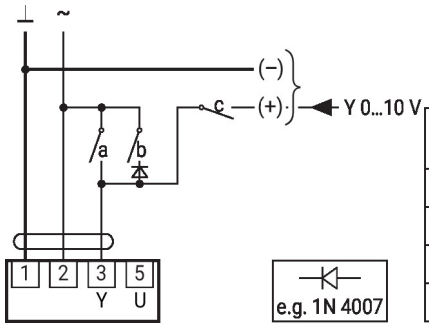

1	2	a	b	c	
					0 %
					ZS 50%
					100%
					Y

Override control with AC 24 V with rotary switch

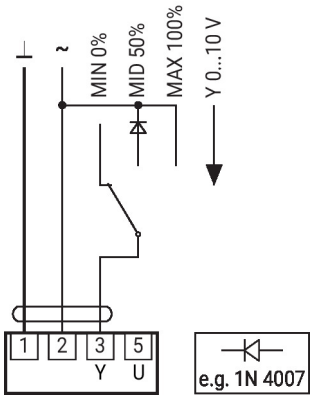

Control remotely 0...100% with positioner SG..

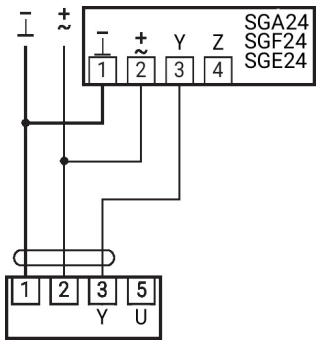

Minimum limit with positioner SG..

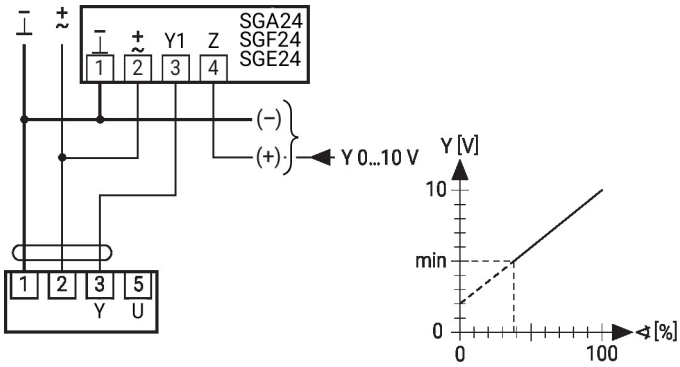

Further electrical installations

Functions with basic values (conventional mode)

Primary/secondary operation (position-dependent)

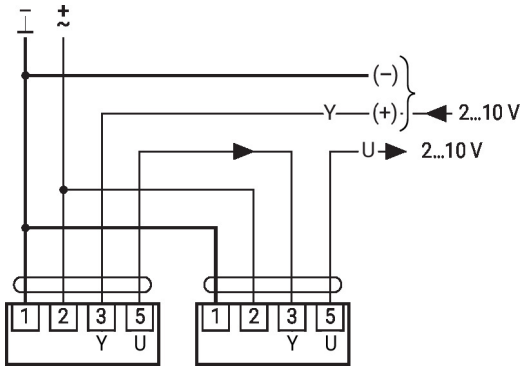

Control with 4...20 mA via external resistor

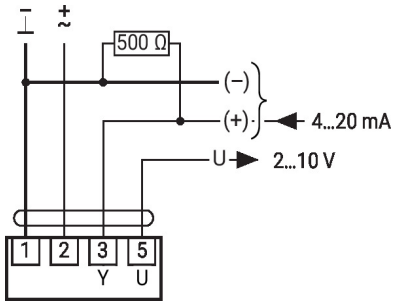

Caution:
The operating range must be set to DC 2...10 V.
The 500 Ohm resistor converts the 4...20 mA current signal to a voltage signal DC 2...10 V.

Functional check

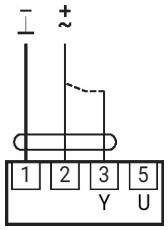

Procedure
1. Connect 24 V to connections 1 and 2
2. Disconnect connection 3:
– with direction of rotation L: Actuator rotates to the left
– with direction of rotation R: Actuator rotates to the right
3. Short-circuit connections 2 and 3:
– Actuator runs in opposite direction

MP-Bus

MP-Bus Network topology

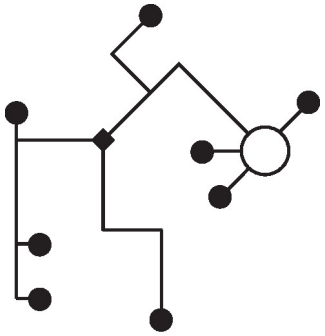

There are no restrictions for the network topology (star, ring, tree or mixed forms are permitted).
Supply and communication in one and the same 3-wire cable
• no shielding or twisting necessary
• no terminating resistors required

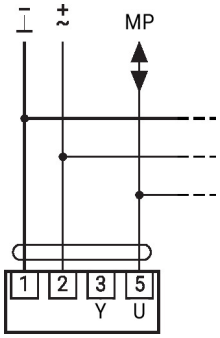

Max. 8 additional MP-Bus nodes

Further electrical installations

MP-Bus

Connection of active sensors

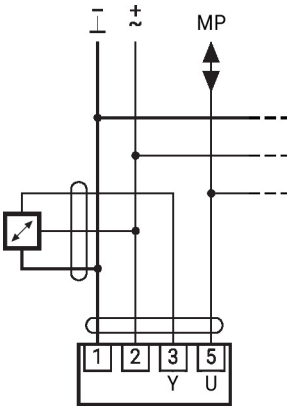

Max. 8 additional MP-Bus nodes
- Supply AC/DC 24 V
- Output signal 0...10 V (max. 0...32 V)
- Resolution 30 mV

Connection of external switching contact

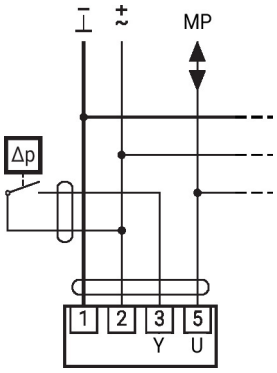

Max. 8 additional MP-Bus nodes
- Switching current 16 mA @ 24 V
- Start point of the operating range must be configured on the MP actuator as ≥0.5 V

Connection of passive sensors

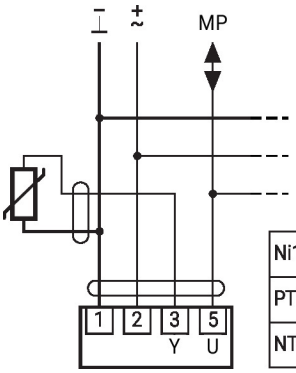

Ni1000	−28...+98°C	850...1600 Ω [2]
PT1000	−35...+155°C	850...1600 Ω [2]
NTC	−10...+160°C [1]	200 Ω...60 kΩ [2]

1) Depending on the type
2) Resolution 1 Ohm
Compensation of the measured value is recommended

Functions with specific parameters (configuration necessary)

Override control and limiting with AC 24 V with relay contacts

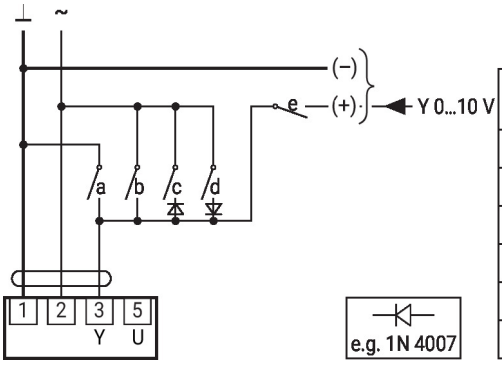

1	2	a	b	c	d	e	
							Close[1]
							MIN
							ZS
							MAX
							Open
							Y

Control open/close

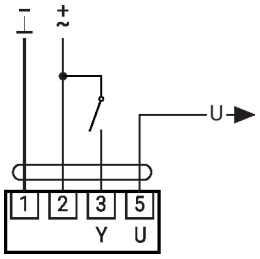

Further electrical installations

Functions with specific parameters (configuration necessary)

Control 3-point with AC 24 V

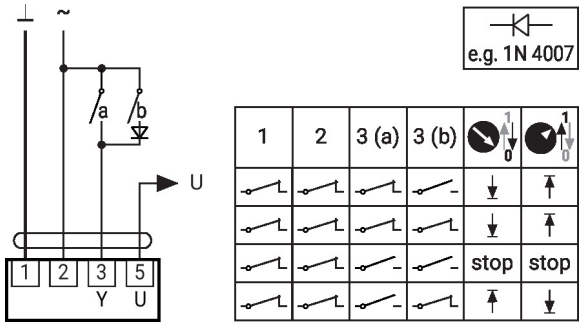

Override control and limiting with AC 24 V with rotary switch

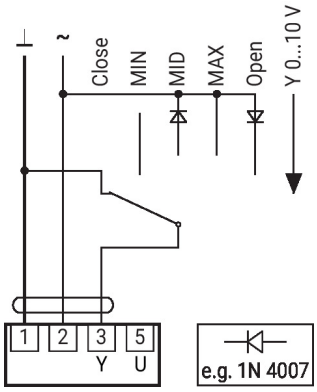

Caution:
The "Close" function is only guaranteed if the start point of the operating range is defined as min. 0.5 V.

Operating controls and indicators

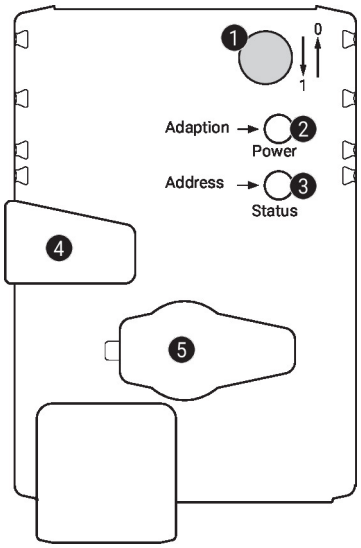

1 Direction-of-stroke switch

Switch over:	Direction of stroke changes

2 Push-button and LED display green

Off:	No power supply or malfunction
On:	In operation
Press button:	Triggers stroke adaptation, followed by standard mode

3 Push-button and LED display yellow

Off:	Standard mode
On:	Adaptation or synchronisation process active
Flickering:	MP-Bus communication active
Flashing:	Request for addressing from MP client
Press button:	Confirmation of addressing

4 Manual override button

Press button:	Gear train disengages, motor stops, manual override possible
Release button:	Gear train engages, synchronisation starts, followed by standard mode

5 Service plug
For connecting configuration and service tools

Check power supply connection

2 Off and 3 On	Possible wiring error in power supply

Installation notes

If a rotary support and/or coupling piece is used, losses in the actuation force losses are to be expected.

Applications without transverse forces

The linear actuator is screwed directly to the housing at three points. Afterwards, the head of the gear rod is fastened to the moving part of the ventilation application (e.g. damper or slide valve).

Installation notes

Applications with transverse forces

Connect the coupling piece with the internal thread (Z-KS2) to the head of the gear rod. Screw the rotary support (Z-DS1) to the ventilation application. Afterwards, the linear actuator is screwed to the previously mounted rotary support with the enclosed screw. Then, the coupling piece, which is mounted to the head of the gear rod, is attached to the moving part of the ventilating application (e.g. damper or slide valve). The transverse forces can be compensated for to a certain limit with the rotary support and/or coupling piece. The maximum permissible swivel angle of the rotary support and coupling piece is 10°, laterally and upwards.

Service

Using Belimo Assistant 2, device parameters can be modified. Belimo Assistant 2 can operate on a smartphone, tablet or PC. The available connection options vary depending on the hardware on which Belimo Assistant 2 is installed.

For more information about Belimo Assistant 2, refer to the Quick Guide – Belimo Assistant 2.

Wired connection

Belimo devices can be accessed by connecting Belimo Assistant Link to the USB port on a PC or laptop and to the Service Socket or MP-Bus wire on the device.

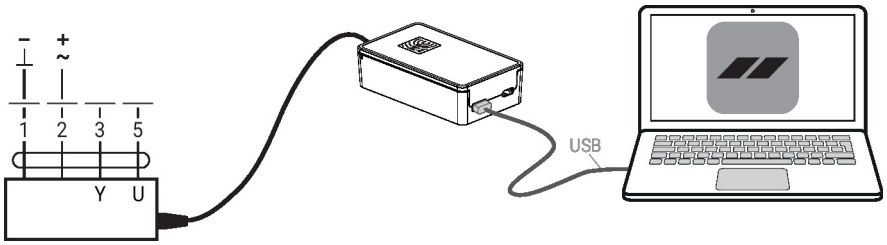

Dimensions

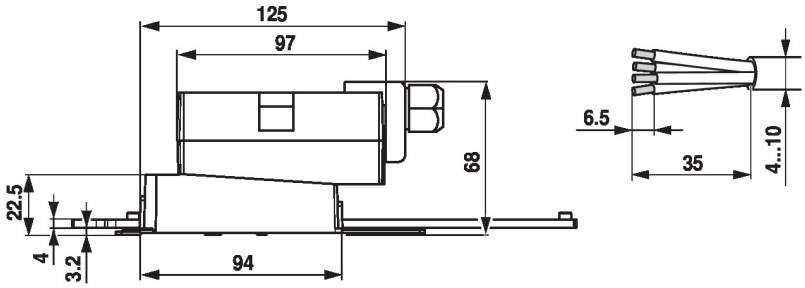

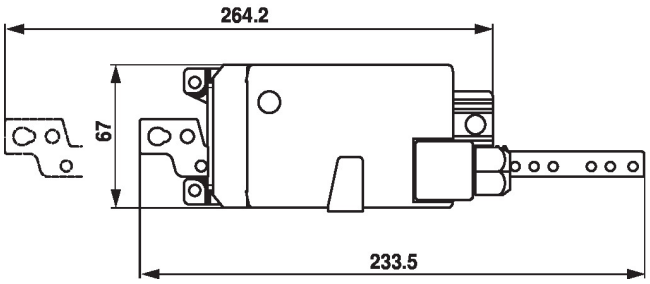

Further documentation

- Overview MP Cooperation Partners
- Tool connections
- Introduction to MP-Bus Technology
- Quick Guide – Belimo Assistant 2

Application notes

- For digital control of actuators in VAV applications patent EP 3163399 must be considered.