VAV-Compact unit – with VAV controller, dynamic Δp sensor and damper actuator

- Field of application: VAV units in comfort applications
- Application: VAV/CAV, position control
- Belimo D3, dynamic flow sensor
- Functional range differential pressure 0...500 Pa
- Control communicative
- Communication via KNX (S-Mode)
- Conversion of sensor signals
- Service socket for operating devices

Picture may differ from product

Technical data

Electrical data	Nominal voltage	AC/DC 24 V
	Nominal voltage frequency	50/60 Hz
	Nominal voltage range	AC 19.2...28.8 V / DC 21.6...28.8 V
	Power consumption in operation	2 W
	Power consumption in rest position	1 W
	Power consumption for wire sizing	4 VA
	Inrush current (Imax)	8.0 A @ 5 ms
	Connection supply / control	Cable 1 m, 6x 0.75 mm²
Data bus communication	Communicative control	KNX (S-Mode)
	Number of nodes	max. 64 per line segment, reduce number of nodes with connecting cable with short lines
	Communication medium	KNX TP
	Configuration mode	S-Mode
	Current consumption of KNX-Bus	max. 5 mA
Functional data	Torque motor	5 Nm
	V'max adjustable	20...100% of V'nom
	V'mid adjustable	>V'min...<V'max
	V'min adjustable	0...100% of V'nom (<V'max)
	Manual override	with push-button, can be locked
	Angle of rotation	95°
	Angle of rotation note	adjustable mechanical or electrical limitation
	Mechanical interface	Universal shaft clamp 6...20 mm
	Position indication	Mechanical
Measuring data	Measuring principle	Belimo D3, dynamic flow sensor
	Installation orientation	position-independent, no zeroing necessary
	Functional range differential pressure	0...500 Pa
	Maximum system pressure	1500 Pa
	Burst pressure	±5 kPa
	Height compensation	Adjustment of system height (range 0...3000 m above sea level)
	Condition measuring air	0...50°C / 5...95% RH, non-condensing
	Pressure tube connection	Nipple diameter 5.3 mm
Safety data	Protection class IEC/EN	III, Protective Extra-Low Voltage (PELV)
	Degree of protection IEC/EN	IP54
	Degree of protection NEMA/UL	NEMA 2
	Housing	UL Enclosure Type 2
	EMC	CE according to 2014/30/EU

Technical data

Safety data	Certification IEC/EN	IEC/EN 60730-1 and IEC/EN 60730-2-14
	Type of action	Type 1
	Rated impulse voltage supply / control	0.8 kV
	Pollution degree	3
	Ambient humidity	Max. 95% RH, non-condensing
	Ambient temperature	0...50°C [32...122°F]
	Storage temperature	-20...80°C [-4...176°F]
	Servicing	maintenance-free
Weight	Weight	0.55 kg

Safety notes

- The device must not be used outside the specified field of application, especially not in aircraft or in any other airborne means of transport.
- Outdoor application: Only possible if no (sea) water, snow, ice, sunlight or aggressive gases act directly on the device and if it is ensured that the ambient conditions remain within the limit values specified in the data sheet at all times.
- Only authorised specialists may carry out installation. All applicable legal or institutional installation regulations must be complied with during installation.
- The device may only be opened at the manufacturer's site. It does not contain any parts that can be replaced or repaired by the user.
- Cables must not be removed from the device.
- The device contains electrical and electronic components and must not be disposed of as household refuse. All locally valid regulations and requirements must be observed.

Product features

Application

The VAV-Compact unit is used for comfort applications for pressure-independent control of VAV units. See Technical brochure – VAV-Compact product range for volumetric flow applications.

Pressure measurement

The integrated differential pressure sensor is also suitable for very small volumetric flows. The maintenance-free sensor technology enables a wide range of applications in the HVAC comfort area such as in residential buildings, offices, hotels, etc.

Actuators

For the various applications and damper designs, various actuator variants with torque 5, 10 or 20 Nm are available to the VAV unit manufacturer.

Control functions

Volumetric flow (VAV/CAV) or position control (Open Loop)

Application Variable Air Volume (VAV)

Variable air volume control in the V'min...V'max range, demand-dependent via a modulating reference variable (analogue or bus), e.g. room temperature or CO_2 controller for energy-saving air conditioning of individual rooms or zones.

V'nom, Δp @ V'nom

OEM-specific calibration parameters, suitable for the VAV unit

Adjustment range Δp @ V'nom: 38..500 Pa

V'max (Max)

Maximum operating volumetric flow, adjustable 20...100% V'nom

V'min (Min)

Minimum operating volumetric flow, adjustable 0...100% V'nom

Application Constant Air Volume (CAV)

Constant volumetric flow control. If required, via step switching (switching contacts) for constant volumetric flow applications.

Steps: CLOSE / Min / Max / OPEN

Product features

Application Position Control (Open Loop)

Position control for integration of the VAV-Compact into an external VAV control loop. Transmitter and actuator unit.

Max

Range: 20...100 % rotation range

Min

Range: 0...100 % rotation range

Demand Controlled Ventilation (DCV)

Output of the demand signal (damper position) to the higher-level automation system – DCV function.

Bus operation

The actuator is equipped with an integrated interface for KNX (S-Mode) and can be connected with all KNX devices that have corresponding data points available.

In bus mode, a sensor (0...10 V) can optionally be connected, e.g. a temperature sensor or a switching contact, for integration into the higher-level bus system.

Operating settings

Control functions

Volumetric flow (VAV/CAV) or position control (Open Loop)

Operating settings Min/Max/Nom

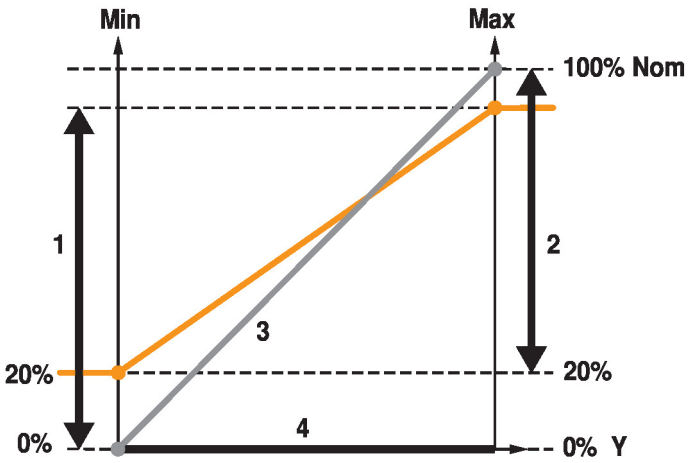

Nominal value (OEM setting) Nom
Adjustment range Min 1
Adjustment range Max 2
Feedback U 0...100% Nom 3
Control Y Min...Max 4

Operating and service tools

Belimo Assistant 2 – can be locally plugged into the service socket or remotely via MP connection.

ETS (configuration software for KNX)

Accessories

Tools

Description	Type
Service tool for wired and wireless setup, on-site operation and troubleshooting.	Belimo Assistant 2
Belimo Assistant Link Bluetooth and USB to NFC and MP-Bus converter for configurable and communicative devices	LINK.10
Connecting cable 5 m, A: RJ11 6/4 LINK.10, B: 6-pin for connection to service socket	ZK1-GEN
Connecting cable 5 m, A: RJ11 6/4 LINK.10, B: free wire end for connection to MP/PP terminal	ZK2-GEN

Electrical installation

Wire colours:
1 = black
2 = red
3 = white
5 = orange
6 = pink
7 = grey

Functions:
D+ = KNX+ (pink > red)
D- = KNX- (grey > black)

Connection without sensor

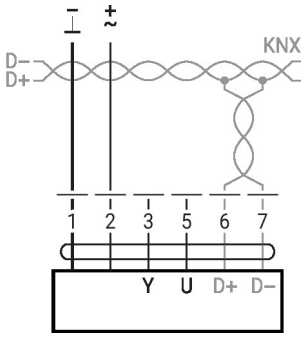

Converter for sensors

Connection with switching contact, e.g. differential pressure switch

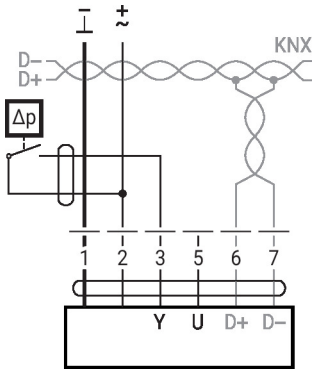

Switching contact requirements: The switching contact must be able to switch a current of 16 mA at 24 V accurately.

Connection with active sensor, e.g. 0...10 V @ 0...50°C

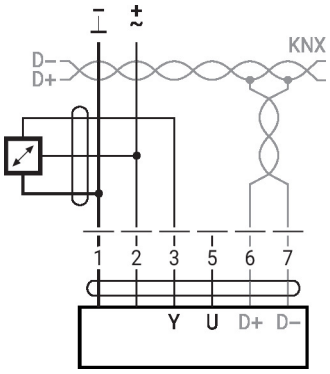

Possible voltage range: 0...32 V
Resolution 30 mV
• Switching current 16 mA @ 24 V
• Start point of the operating range must be configured on the KNX actuator as ≥0.5 V

Further electrical installations

Functions with specific parameters (configuration necessary)

Local override control

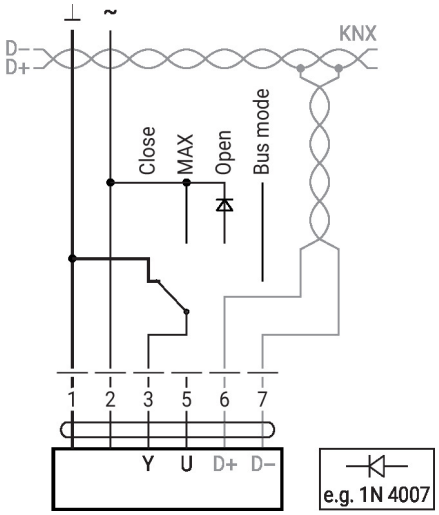

If no sensor is integrated, then connection 3 (Y) is available for a local override control.
Caution: Works only with AC 24 V supply!

Parameter and tool overview

Settings and tool function

Designation	Setting values, limits, explanations	Units	Tool: ZTH EU	Tool: PC-Tool	Remarks
System-specific data					
Position	16 characters, e.g. Office 4 6th OG ZL	String	r	r/w	
Designation	16 characters: Unit designation, etc.	String	r	r/w	
Address (MP)	PP		r/w	r/w	For KNX applications: PP
V'_{max}	20...100% [V'_{nom}]	m³/h / l/s / cfm	r/w	r/w	>/= V'_{min}
V'_{mid}	V'_{min}...V'_{max}	m³/h / l/s / cfm	r/w	r/w	
V'_{min}	0...100% [V'_{nom}]	m³/h / l/s / cfm	r/w	r/w	</= V'_{max}
Altitude of installation	0...3000	m	r/w	r/w	Adaptation of Δp sensor to altitude (meters above sea level)
Controller Settings					
Control function	Volumetric flow / Position control (Open Loop)		–	r/w	
Mode	0...10 / 2...10	V	r/w[2]	r/w	For KNX applications: 2...10
CAV function[2]	CLOSE/V'_{min}/V'_{max}; Shut-off level CLOSE 0.1 V CLOSE/V'_{min}/V'_{max}; Shut-off level CLOSE 0.5 V V'min/V'_{mid}/V'_{max}; (NMV-D2M-comp.)		–	r/w	Not relevant for KNX applications
Positioning signal Y	Start value: 0.6...30; Stop value: 2.6...32	V	r	r/w	Not relevant for KNX applications
Feedback U	Volume / Damper position / Δp		–	r/w	Definition of feedback signal
Feedback U	Start value: 0...8; Stop value: 2...10	V	–	r/w	
Behaviour when switched on (Power-on)	No action / Adaptation / Synchronisation		–	r/w	
Synchronisation behaviour	Y=0% Y=100%		–	r/w	Synchronisation at damper position 0 or 100%
Bus fail position	Last setpoint / Damper CLOSE V'_{min} / V'_{max} / Damper OPEN		–	r/w	
Unit-specific settings					
V'_{nom}	0...60´000 m³/h	m³/h / l/s / cfm	r	r/(w)[1]	Unit-specific setting value
Δp@V'_{nom}	38...500	Pa	r	r/(w)[1]	Unit-specific setting value
Print function label			–	w	
Other settings					
Direction of rotation (for Y=100%)	cw/ccw		r/w[2]	r/w	Unit-specific setting value
Range of rotation	Adapted [4] / programmed 30...95	°	–	r/w	
Torque	100 / 75 / 50 / 25	%		r/w	% of nominal torque

[1] Write function accessible only for VAV manufacturers
[1] Access only via Servicing level 2
[2] CAV setting for MP operation
[3] Within the mechanical limitation
[4] The first time the supply voltage is switched on, i.e. at the time of initial commissioning, the actuator carries out an adaption, which is when the operating range and position feedback adjust themselves to the mechanical setting range. The actuator then moves into the required position in order to ensure the volumetric flow defined by the control signal.

Parameter and tool overview

Settings and tool function

Designation	Setting values, limits, explanations	Units	Tool ZTH EU	Tool PC-Tool	Remarks
Operating data					
Actual value / Setpoint Damper position		m³/h / l/s / cfm Pa / %	r T	r	T (Trend) display with print function and data saving to HD
Simulation	Damper OPEN/CLOSE V'_{min} / V'_{mid} / V'_{max} / Motor Stop		w	w	
Running times	Operating time, running time Ratio (relation)		–	r	
Alarm messages	Setting range enlarged, Mech. overload, Stop&Go ratio too high		–	r/w	
Serial number	Device ID		r	r	Incl. production date
Type	Type designation		r	r	
Version display	Firmware, Config. table ID		r	r	
Configuration data					
Print, send			–	yes	
Backup in file			–	yes	
Log data / Logbook	Activities log		–	yes	

KNX group objects

Name	Type	Flags					Data point type				Values range
		C	R	W	T	U	ID	DPT_Name	Format	Unit	
Setpoint	I	C	–	W	–	–	5.001	_percentage	1 Byte	%	[0...100] Resolution 0.4%
Override control	I	C	–	W	–	–	20.*	_enum	1 Byte	–	0 = no override 1 = Open 2 = Closed 3 = Min 4 = Mid 5 = Max
Reset	I	C	–	W	–	–	1.015	_reset	1 Bit	–	0 = no action 1 = reset
Adaptation	I	C	–	W	–	–	1.001	_switch	1 Bit	–	0 = no action 1 = adapt
Testrun	I	C	–	W	–	–	1.001	_switch	1 Bit	–	0 = no action 1 = Testrun
Min	I/O	C	R	W	–	–	5.001	_percentage	1 Byte	%	[0...100] Resolution 0.4%
Max	I/O	C	R	W	–	–	5.001	_percentage	1 Byte	%	[0...100] Resolution 0.4%
Relative position	O	C	R	–	T	–	5.001	_percentage	1 Byte	%	[0...100] Resolution 0.4%
Absolute position	O	C	R	–	T	–	8.011 7.011	_rotation_angle _length	2 Byte	° mm	[–32'768...32'768] [0...65'535]
Relative volumetric flow	O	C	R	–	T	–	5.001	_percentage	1 Byte	%	[0...100] Resolution 0.4%
Absolute volumetric flow	O	C	R	–	T	–	14.077	_volume_flux	4 Byte	m^3/s	1.0×10^{-10} m^3/s
Absolute volumetric flow	O	C	R	–	T	–	9.009	_air_flow	2 Byte	m^3/h	$1.0 \times m^3/h$
Nominal volumetric flow	O	C	R	–	T	–	14.077	_volume_flux	4 Byte	m^3/s	1.0×10^{-10} m^3/s
Nominal volumetric flow	O	C	R	–	T	–	9.009	_air_flow	2 Byte	m^3/h	$1.0 \times m^3/h$
Fault state	O	C	R	–	T	–	1.002	_boolean	1 Bit	–	0 = no error 1 = error
Overriden	O	C	R	–	T	–	1.002	_boolean	1 Bit	–	0 = not active 1 = active
Gear disengagement active	O	C	R	–	T	–	1.002	_boolean	1 Bit	–	0 = engaged 1 = disengaged
Service information	O	C	R	–	T	–	22.*	_bitset16	2 Byte	–	Bit 0 (1) Utilisation too high Bit 1 (2) Actuation path increased Bit 2 (4) Mechanical overload Bit 3 (8) – (Not used) Bit 4 (16) – (Not used) Bit 5 (32) – (Not used) Bit 6 (64) – (Not used) Bit 7 (128) – (Not used) Bit 8 (256) Internal activity Bit 9 (512) Bus monitoring triggered
Sensor value – Relative Humidity – Air Quality – Voltage mV – Value voltage scaled – Voltage scaled % – switch	O	C	R	–	T	–	 9.007 9.008 9.020 7.* 5.001 1.001	 _humidity _parts/million _voltage _pulses_length _percentage _switch	 2 Byte 2 Byte 2 Byte 2 Byte 1 Byte –	 % RH ppm mV mm % –	 [0...670'760] [0...670'760] [–670'760...670'760] [0...65'535] [0...100] 0/1

KNX group objects (continuation)

Setpoint
Specification of set volume or actuator position in % between the parameterised Min and Max limits.
The operating mode is set by the manufacturer of the volumetric flow unit.

Override control
Overriding the setpoint with defined compulsions.
As data point type, 1 Byte (without algebraic sign) is recommended (DPT 20.*).
The override control is not stored persistentely and is reset after restarting the device.

Reset
Resetting the saved service messages
(see KNX group object *Service information*).

Adaptation
Perform the adaption. The first-time adaption is performed by the manufacturer of the volumetric flow unit.
An active adaptation is signaled in Bit 8 of *Service information.*

Testrun
Performance of a testrun that checks the entire operating range.
An active testrun is signalled in Bit 8 of *Service information.* After completion, detected faults (mechanical overload, actuation path exceeded) are signalled in *Service information.*

Min
Minimum Limit (volumetric flow or position) in %
Position control: Limit in % of adapted working range
Volumetric flow control: Limit in % of nominal volumetric flow V'nom
⚠ This value is stored persistently on the device and must not be written to regularly. Regular writing to the object can lead to malfunctions.

Max
Maximum Limit (volumetric flow or position) in %
Position control: Limit in % of adapted working range
Volumetric flow control: Limit in % of nominal volumetric flow V'nom
⚠ This value is stored persistently on the device and must not be written to regularly. Regular writing to the object can lead to malfunctions.

Absolute position
Absolute position/stroke
The data point type is to be selected depending on the type of movement:

[°] DPT 8.011
[mm] DPT 7.011

Relative volumetric flow
Relative volumetric flow in % of the nominal volumetric flow V_{nom}

Absolute volumetric flow
Absolute volumetric flow in m^3/s and m^3/h

Nominal volumetric flow
Nominal volumetric flow in m^3/s and m^3/h
The nominal volumetric flow is determined by the manufacturer of the volumetric flow unit.

Fault state
Collective fault based on Bit 0...Bit 7 of *Service information.*

Overridden
Signalling of an active override control (OPEN/CLOSED)
The device can be commanded via the KNX group object *Override control* or via the forced switching at the input Y/3. Only the override controls „Open“ and „Closed“are signalled.

Gear disengagement active
Signalling an active gear disengagement

Service information
Detailed information regarding instrument status
As data point type, Bitset 16-Bit is recommended (DPT 22.*)
Status information:

Bit 0: Utilisation too high: Motor operation too high in relation to operating time
Bit 1: Actuation path increased: Defined end position exceeded
Bit 2: Mechanical overload: Defined end position not reached
Bit 3...7: Not used with this device type
Bit 8: Internal activity: Synchronisation, Adaption or test run active
Bit 9: Bus monitoring triggered
Bit 10...15: Not used with this device type
Bit 0..2: Are saved by the device and can be reset with the KNX group object Reset.
Alternatively, the individual bits can be read as the sum of the fault status.

Sensor value
The representation of the sensor value is dependent on the configuration.
See section „KNX parameters – Sensor“

KNX parameters

Common

Setpoint with bus fail

A setpoint can be defined for cases of communication interruption.

Values range: None (last setpoint)
Open
Closed
Mid
Factory setting: None (last setpoint)

The monitoring of the communication takes place for the KNX group objects *Setpoint* and *Override control*. If none of the objects is written within the parameterised monitoring time, the bus fail position is set and signalled in the *Service information* (Bit 9).

Bus monitoring time [min]

Monitoring time for the detection of a communication interruption.

Values range: 1...120 min
Factory setting: –

Difference value for sending the actual values [%]

Actual values (position, volumetric flow) are transferred at the time of a value change insofar as these change by the parameterised difference value. If the relative value changes by the difference value, not only the relative actual value but also the absolute actual value are transferred.

Values range: 0...100%
Factory setting: 5%

The transfer is deactivated with 0% in the event of a value change.

Repetition time [s]

Repetition time for all position and sensor actual values. Status objects are not transferred except with a change.

Values range: 0...3'600 s
Factory setting: 0 = no periodic transmission

Sensor

Sensor type

The input Y/3 can be used to connect a sensor. The sensor value is digitised and made available as KNX communication object.

Values range: No sensor
Active sensor (0...32 V)
Switching contact (0 / 1)
Humidity sensor (0...10 V corresponds 0...100%)
Air quality sensor CO2 (0...10 V corresponds 0...2'000 ppm)
Factory setting: No sensor

A switching to Y/3 is treated as local override switching in the absence of sensor parameterization.

Difference value for sending the sensor value

The sensor value is transferred at the time of a value change insofar as this changes by the parameterised difference value.

Values range: 0...65'535
Factory setting: 1

The transfer is deactivated with 0 in the event of a value change. Without value change, the sensor value is sent because of the repetition time.

Output
(for sensor type „Active sensor")

Only for „Active sensor" sensor type

Values range: Sensor value mV (DPT 9.020)
Sensor value scaled (DPT 7.xxx)
Sensor value scaled % (DPT 5.001)
Factory setting: –

For „Sensor value mV", the measured voltage is made available without processing. In the case of the scaled sensor values, a linear transformation can be defined with two points.

Polarity
(for sensor type «Switching contact»)

The polarity can be defined for the sensor type „Switching contact".

Values range: Normal
Inverted
Factory setting: –

KNX workflows

Product database

The product database for the import in ETS4 or higher is available at the Belimo website.

KNX workflows

Setting physical address

The programming of the physical address takes place by ETS and the programming button on the device.

If the programming button is not accessible or accessible only with difficulty, then the address can be set using a point-to-point connection: "Overwrite Individual Address: 15.15.255"

As a third possibility, the physical address can be programmed on the basis of the KNX series number (e.g. with Moov'n'Group). The KNX series number is placed on the device in two versions. One sticker can be removed for adhesion on the commissioning journal, for example.

Firmware upgrade

The KNX firmware of the device is updated automatically with the programming of the application program if the product database has a more recent version.

The first programming procedure takes somewhat longer in such cases (>1 min).

Resetting to KNX factory settings

If necessary, the device can be reset manually to the KNX factory settings (physical address, group address, KNX parameters).

For the reset, the programming button on the device must be pressed down for at least 5 s during start-up.

Operating controls and indicators

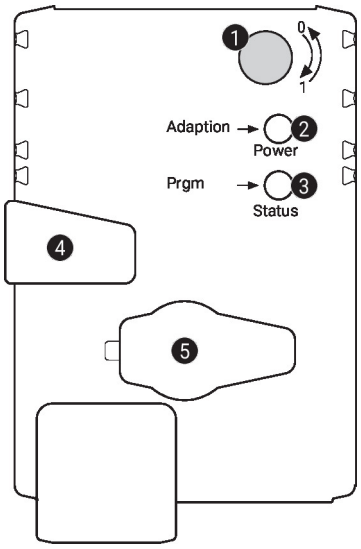

1 Direction-of-rotation switch

Switch over:	Direction of rotation changes

2 Push-button and LED display green

Off:	No power supply or malfunction
On:	In operation
Press button:	Triggers angle-of-rotation adaptation, followed by standard mode

3 Push-button and LED display yellow

Off:	The actuator is ready
On:	Adaptation or synchronisation process active or actuator in programming mode (KNX)
Flashing:	Connection test (KNX) active
Press button:	In operation (>3 s): Switch the programming mode on and off (KNX) When starting (>5 s): Reset to factory setting (KNX)

4 Manual override button

Press button:	Gear train disengages, motor stops, manual override possible
Release button:	Gear train engages, synchronisation starts, followed by standard mode

5 Service plug

For connecting configuration and service tools

Installation notes

Installation situation

Mounting VAV-Compact control equipment:

The VAV-Compact is assembled, set and calibrated on the VAV unit in the factory by the VAV unit manufacturer.

Installation of the VAV unit:

The VAV unit must be installed according to the specifications of the VAV unit manufacturer.

Installation specification Δp sensor:

No restrictions, but it must be avoided that any condensation can run into the sensor and remain there.

Accessibility of control equipment:

Accessibility to the control equipment must be guaranteed at all times.

Pressure tube connections:

The pressure tube connections must not come into contact with liquids or greasing agents of any kind, this includes any residue inside or on the surface of the pressure tubes.

Servicing

Cleaning work during installation, commissioning or maintenance

Belimo VAV devices are maintenance-free. We recommend dry removal of dust from the outside of the housing if necessary.

The duct system and the VAV units are maintained on the occasion of the cleaning intervals required by law or by the specific system. Please observe the following points.

Cleaning work on the damper, differential pressure pickup devices and pressure tubes

When cleaning the duct system or the VAV unit, remove the pressure tubes on the VAV controller so that it will not be affected.

Using compressed air, e.g. blowing out the differential pressure pickup devices or pressure tubes

Before doing this work, disconnect the differential pressure pickup devices or pressure tubes from the differential pressure sensor.

Connecting the pressure tubes

To ensure the correct installation of the pressure tubes, we recommend marking them with + or – before disassembly.

Service

Using Belimo Assistant 2, device parameters can be modified. Belimo Assistant 2 can operate on a smartphone, tablet or PC. The available connection options vary depending on the hardware on which Belimo Assistant 2 is installed.

For more information about Belimo Assistant 2, refer to the Quick Guide – Belimo Assistant 2.

Wired connection

Belimo devices can be accessed by connecting Belimo Assistant Link to the USB port on a PC or laptop and to the Service Socket or MP-Bus wire on the device.

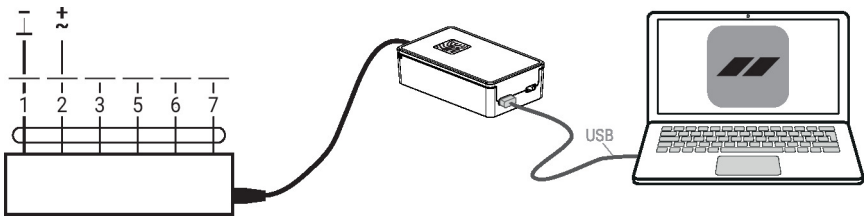

Dimensions

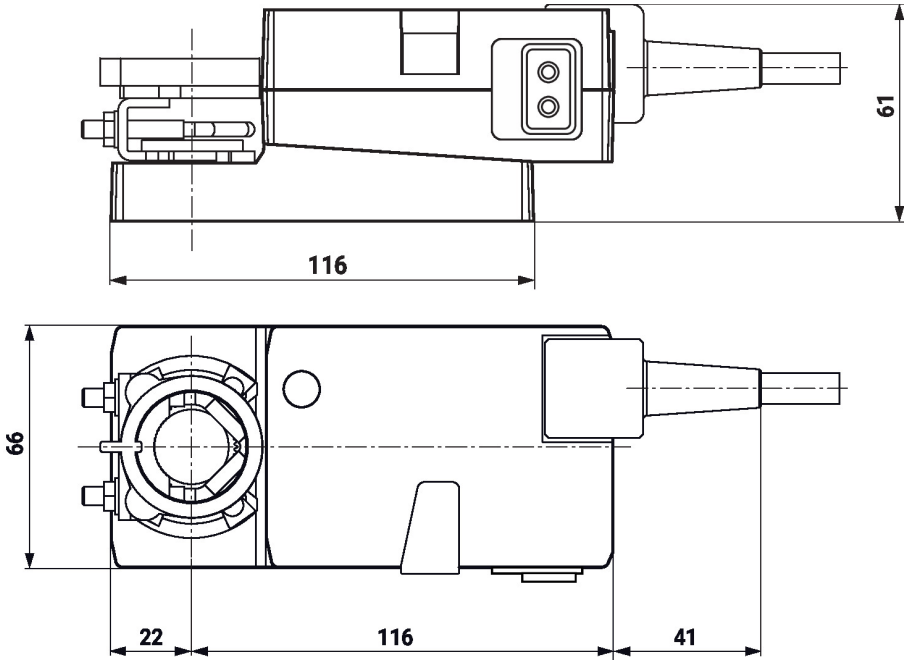

Further documentation

- VAV-Compact product range for comfort applications
- Tool connections
- VAV-Universal application description
- Volumetric flow and pressure control from Belimo, product range overview
- Quick Guide – Belimo Assistant 2