Rotary actuator fail-safe for adjusting dampers in technical building installations

- Air damper size up to approx. 2 m²
- Torque motor 10 Nm
- Nominal voltage AC/DC 24 V
- Control Open/close

Picture may differ from product

## Technical data

| | | |
|---|---|---|
| **Electrical data** | Nominal voltage | AC/DC 24 V |
| | Nominal voltage frequency | 50/60 Hz |
| | Nominal voltage range | AC 19.2...28.8 V / DC 21.6...28.8 V |
| | Power consumption in operation | 6 W |
| | Power consumption in rest position | 2.5 W |
| | Power consumption for wire sizing | 8.5 VA |
| | Connection supply / control | Cable 1 m, 2x 0.75 mm² |
| | Parallel operation | Yes (note the performance data) |
| **Functional data** | Torque motor | 10 Nm |
| | Torque fail-safe | 10 Nm |
| | Direction of motion motor | selectable by mounting L/R |
| | Direction of motion fail-safe | selectable by mounting L/R |
| | Manual override | by means of hand crank and locking switch |
| | Angle of rotation | Max. 95° |
| | Angle of rotation note | adjustable starting at 33% in 2.5% steps (with mechanical end stop) |
| | Running time motor | 75 s / 90° |
| | Running time fail-safe | <20 s @ -20...50°C, <60 s @ -30°C |
| | Sound power level, motor | 45 dB(A) |
| | Mechanical interface | Universal shaft clamp 10...25.4 mm |
| | Position indication | Mechanical |
| | Service life | Min. 60'000 fail-safe positions |
| **Safety data** | Protection class IEC/EN | III, Safety Extra-Low Voltage (SELV) |
| | Power source UL | Class 2 Supply |
| | Degree of protection IEC/EN | IP54 |
| | Degree of protection NEMA/UL | NEMA 2 |
| | Housing | UL Enclosure Type 2 |
| | EMC | CE according to 2014/30/EU |
| | Certification IEC/EN | IEC/EN 60730-1 and IEC/EN 60730-2-14 |
| | UL Approval | cULus according to UL60730-1A, UL60730-2-14 and CAN/CSA E60730-1<br>The UL marking on the actuator depends on the production site, the device is UL-compliant in any case |

## Technical data

| | | |
|---|---|---|
| **Safety data** | Hygiene test | According to VDI 6022 Part 1 / SWKI VA 104-01, cleanable and disinfectable, low emission |
| | Type of action | Type 1.AA |
| | Rated impulse voltage supply / control | 0.8 kV |
| | Pollution degree | 3 |
| | Ambient humidity | Max. 95% RH, non-condensing |
| | Ambient temperature | -30...50°C [-22...122°F] |
| | Storage temperature | -40...80°C [-40...176°F] |
| | Servicing | maintenance-free |
| **Weight** | Weight | 2.0 kg |

## Safety notes

- This device has been designed for use in stationary heating, ventilation and air-conditioning systems and must not be used outside the specified field of application, especially in aircraft or in any other airborne means of transport.
- Outdoor application: only possible in case that no (sea) water, snow, ice, insolation or aggressive gases interfere directly with the device and that it is ensured that the ambient conditions remain within the thresholds according to the data sheet at any time.
- Only authorised specialists may carry out installation. All applicable legal or institutional installation regulations must be complied with during installation.
- The device may only be opened at the manufacturer's site. It does not contain any parts that can be replaced or repaired by the user.
- Cables must not be removed from the device.
- To calculate the torque required, the specifications supplied by the damper manufacturers concerning the cross-section and the design, as well as the installation situation and the ventilation conditions must be observed.
- The device contains electrical and electronic components and must not be disposed of as household refuse. All locally valid regulations and requirements must be observed.

## Product features

**Operating mode**
The actuator moves the damper to the operating position at the same time as tensioning the return spring. The damper is turned back to the fail-safe position by spring force when the supply voltage is interrupted.

**Simple direct mounting**
Simple direct mounting on the damper shaft with a universal shaft clamp, supplied with an anti-rotation mechanism to prevent the actuator from rotating.

**Manual override**
By using the hand crank the damper can be actuated manually and engaged with the locking switch at any position. Unlocking is carried out manually or automatically by applying the operating voltage.

**Adjustable angle of rotation**
Adjustable angle of rotation with mechanical end stops.

**High functional reliability**
The actuator is overload protected, requires no limit switches and automatically stops when the end stop is reached.

## Accessories

| | Description | Type |
|---|---|---|
| **Electrical accessories** | Auxiliary switch 2x SPDT | S2A-F |
| | Feedback potentiometer 1 kΩ | P1000A-F |
| **Mechanical accessories** | Description | Type |
| | Shaft extension 240 mm ø20 mm for damper shaft ø8...22.7 mm | AV8-25 |

## Accessories

| Description | Type |
|---|---|
| End stop indicator | IND-AFB |
| Shaft clamp reversible, for central mounting, for damper shafts ø12.7 / 19.0 / 25.4 mm | K7-2 |
| Ball joint suitable for damper crank arm KH8 / KH10 | KG10A |
| Ball joint suitable for damper crank arm KH8 | KG8 |
| Damper crank arm Slot width 8.2 mm, clamping range ø10...18 mm | KH8 |
| Actuator arm, for 3/4" shafts, clamping range ø10...22 mm, Slot width 8.2 mm | KH-AFB |
| Form fit insert 10x10 mm, Multipack 20 pcs. | ZF10-NSA-F |
| Form fit insert 12x12 mm, Multipack 20 pcs. | ZF12-NSA-F |
| Form fit insert 15x15 mm, Multipack 20 pcs. | ZF15-NSA-F |
| Form fit insert 16x16 mm, Multipack 20 pcs. | ZF16-NSA-F |
| Mounting kit for linkage operation for flat and side installation | ZG-AFB |
| Baseplate extension | Z-SF |
| Anti-rotation mechanism 230 mm, Multipack 20 pcs. | Z-ARS230L |
| Hand crank 63 mm | ZKN2-B |

## Electrical installation

**Supply from isolating transformer.**

**Parallel connection of other actuators possible. Observe the performance data.**

**Wire colours:**
1 = black
2 = red

AC/DC 24 V, open/close

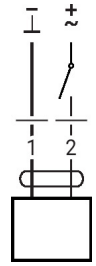

## Dimensions

### Spindle length

| | |
|---|---|
| 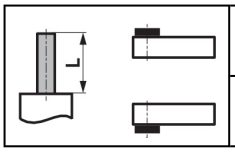 | Min. 85 |
| | Min. 15 |

### Clamping range

| | | | |
|---|---|---|---|
| 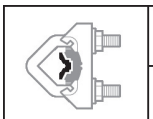 | 10...22 | 10 | 14...25.4 |
| 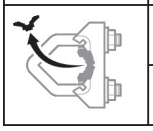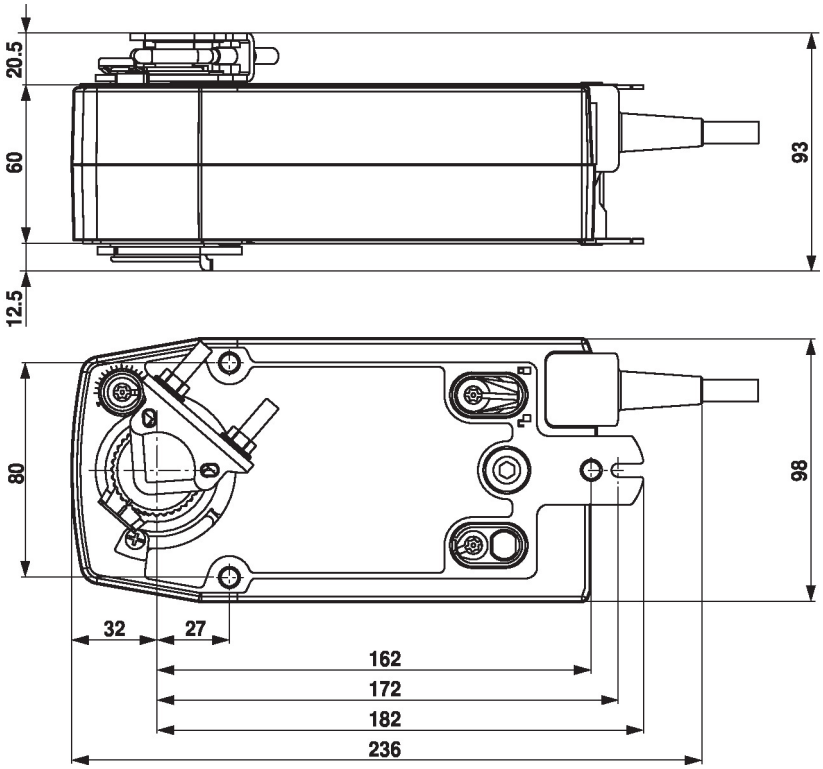 | 19...25.4 | 12...18 | |