RobustLine damper actuator for adjusting dampers in HVAC plants, comparable industrial plants and technical building installations

- Air damper size up to approx. 2 m²
- Torque motor 10 Nm
- Nominal voltage AC/DC 24 V
- Control Open/close, 3-point
- with integrated auxiliary switch
- Optimum protection against corrosion and chemical influences, UV radiation, damp and condensation

Picture may differ from product

Technical data

Electrical data	Nominal voltage	AC/DC 24 V
	Nominal voltage frequency	50/60 Hz
	Nominal voltage range	AC 19.2...28.8 V / DC 19.2...28.8 V
	Power consumption in operation	1.5 W
	Power consumption in rest position	0.2 W
	Power consumption for wire sizing	3.5 VA
	Auxiliary switch	1x SPDT, 0...100%
	Switching capacity auxiliary switch	1 mA...3 A (0.5 A inductive), DC 5 V...AC 250 V
	Connection supply / control	Cable 1 m, 3x 0.75 mm², FRNC (halogen-free)
	Connection auxiliary switch	Cable 1 m, 3x 0.75 mm², FRNC (halogen-free)
	Parallel operation	Yes (note the performance data)
Functional data	Torque motor	10 Nm
	Direction of motion motor	selectable with switch 0 (ccw rotation) / 1 (cw rotation)
	Manual override	with push-button, can be locked
	Angle of rotation	Max. 95°
	Angle of rotation note	can be limited on both sides with adjustable mechanical end stops
	Running time motor	150 s / 90°
	Sound power level, motor	35 dB(A)
	Mechanical interface	Universal shaft clamp 10...20 mm
	Position indication	Mechanical, pluggable
Safety data	Protection class IEC/EN	III, Safety Extra-Low Voltage (SELV)
	Power source UL	Class 2 Supply
	Protection class auxiliary switch IEC/EN	II, reinforced insulation
	Degree of protection IEC/EN	IP66/67
	Degree of protection NEMA/UL	NEMA 4X
	Housing	UL Enclosure Type 4X
	EMC	CE according to 2014/30/EU
	Low voltage directive	CE according to 2014/35/EU
	Certification IEC/EN	IEC/EN 60730-1 and IEC/EN 60730-2-14
	UL Approval	cULus according to UL60730-1A, UL60730-2-14 and CAN/CSA E60730-1 The UL marking on the actuator depends on the production site, the device is UL-compliant in any case
	Type of action	Type 1.B
	Rated impulse voltage supply / control	0.8 kV
	Rated impulse voltage auxiliary switch	2.5 kV

Technical data

Safety data	Pollution degree	4
	Ambient humidity	Max. 100% RH
	Ambient temperature	-30...50°C [-22...122°F]
	Storage temperature	-40...80°C [-40...176°F]
	Servicing	maintenance-free
Weight	Weight	1.7 kg

Safety notes

- This device has been designed for use in stationary heating, ventilation and air-conditioning systems and must not be used outside the specified field of application, especially in aircraft or in any other airborne means of transport.
- Only authorised specialists may carry out installation. All applicable legal or institutional installation regulations must be complied with during installation.
- Junction boxes must at least correspond with housing IP degree of protection!
- The cover of the protective housing may be opened for adjustment and servicing. When it is closed afterwards, the housing must seal tight (see installation instructions).
- The device may only be opened at the manufacturer's site. It does not contain any parts that can be replaced or repaired by the user.
- The cables must not be removed from the device installed in the interior.
- To calculate the torque required, the specifications supplied by the damper manufacturers concerning the cross-section and the design, as well as the installation situation and the ventilation conditions must be observed.
- The device contains electrical and electronic components and must not be disposed of as household refuse. All locally valid regulations and requirements must be observed.
- The information on chemical resistance refers to laboratory tests with raw materials and finished products and to trials in the field in the areas of application indicated.
- The materials used may be subjected to external influences (temperature, pressure, constructional fixture, effect of chemical substances, etc.), which cannot be simulated in laboratory tests or field trials.
- The information regarding areas of application and resistance can therefore only serve as a guideline. In case of doubt, we definitely recommend that you carry out a test. This information does not imply any legal entitlement. Belimo will not be held liable and will provide no warranty. The chemical or mechanical resistance of the materials used is not alone sufficient for judging the suitability of a product. Regulations pertaining to combustible liquids such as solvents etc. must be taken into account with special reference to explosion protection.
- Flexible metallic cable conduits or threaded cable conduits of equal value are to be used for UL (NEMA) Type 4X applications.
- When used under high UV loads, e.g. extreme sunlight, the use of flexible metallic or equivalent cable conduits is recommended.

Product features

Fields of application

The actuator is particularly suitable for utilisation in outdoor applications and is protected against the following weather conditions:
- Wood drying
- Animal breeding
- Food processing
- Agriculture
- Indoor swimming pools / bathhouses
- Rooftop ventilation plant rooms
- General outdoor applications
- Alternating climate
- Laboratories

Product features

Resistances
Noxious gas test EN 60068-2-60 (Fraunhofer Institut ICT / DE)
Salt fog spray test EN 60068-2-52 (Fraunhofer Institut ICT / DE)
Ammoniac test DIN 50916-2 (Fraunhofer Institut ICT / DE)
Climate test IEC60068-2-30 (Trikon Solutions AG / CH)
Disinfectant (animals) (Trikon Solutions AG / CH)
UV Test (Solar radiation at ground level) EN 60068-2-5, EN 60068-2-63 (Quinel / Zug CH)

Used materials
Actuator housing polypropylene (PP)
Cable glands / hollow shaft polyamide (PA)
Connecting cable FRNC
Clamp / screws in general Steel 1.4404
Seals EPDM
Form fit insert aluminium anodised

Simple direct mounting
Simple direct mounting on the damper shaft with a universal shaft clamp, supplied with an anti-rotation mechanism to prevent the actuator from rotating.

Manual override
Manual override with push-button possible (the gear train is disengaged for as long as the button is pressed or remains locked).

Adjustable angle of rotation
Adjustable angle of rotation with mechanical end stops. Standard setting 0...90°. The housing cover must be removed to set the angle of rotation.

High functional reliability
The actuator is overload protected, requires no limit switches and automatically stops when the end stop is reached.

Flexible signalling
With adjustable auxiliary switch (0...100%)
The housing cover must be removed to set the auxiliary switch.

Electrical installation

Supply from isolating transformer.
Parallel connection of other actuators possible. Observe the performance data.

Wire colours:
1 = black
2 = red
3 = white
S1 = violet
S2 = red
S3 = white

AC/DC 24 V, open/close

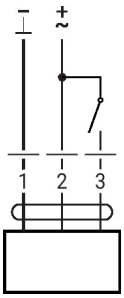

AC/DC 24 V, 3-point

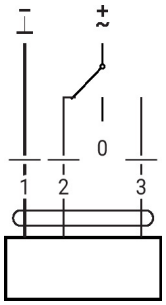

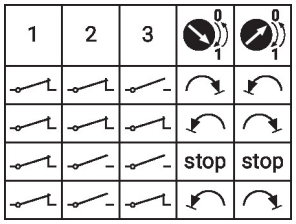

Auxiliary switch

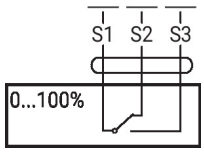

Operating controls and indicators

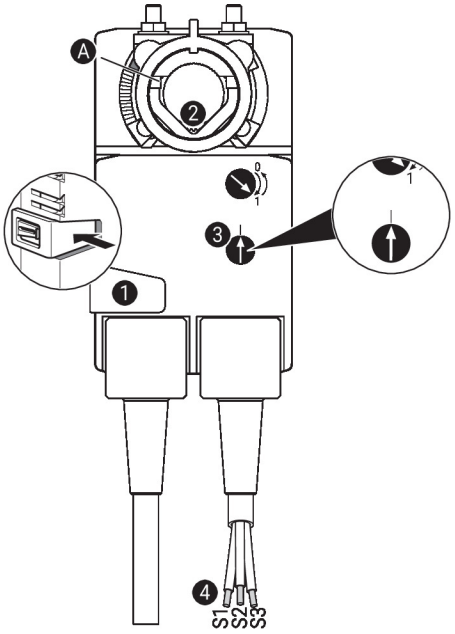

Auxiliary switch settings

⚠ **Note:** Perform settings on the actuator only in deenergised state.

For the auxiliary switch position settings, carry out points ❶ to ❹ successively.

❶ **Manual override button**
Holding button pressed down: Gear train disengages.
Manual override is possible.

❷ **Shaft clamp**
Turn until edge line Ⓐ displays the desired switching position of the actuator and release button ❶.

❸ **Auxiliary switch**
Turn rotary knob until the arrow points to the vertical line.

❹ **Cable**
Connect continuity tester to S1 + S2 or to S1 + S3.
If the auxiliary switch should switch in the opposite direction, rotate the auxiliary switch by 180°.

Dimensions

Shaft length

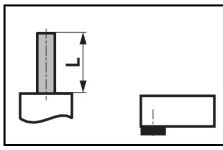	-
	20...58

Clamping range
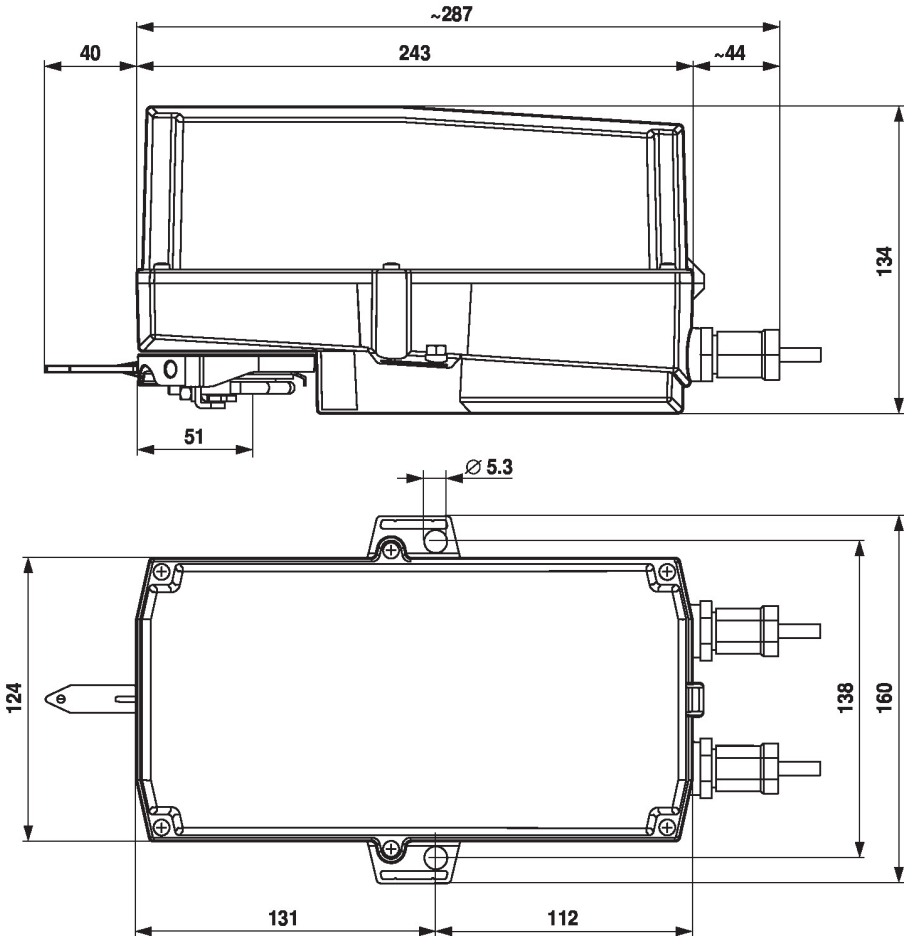
10...20	8...14	10...20