Communicative damper actuator for adjusting dampers in technical building installations

- Air damper size up to approx. 2 m²
- Torque motor 10 Nm
- Nominal voltage AC/DC 24 V
- Control modulating, communicative
- Running time motor 35 s
- Communication via Belimo MP-Bus
- Conversion of sensor signals

Picture may differ from product

Technical data

Electrical data	Nominal voltage	AC/DC 24 V
	Nominal voltage frequency	50/60 Hz
	Nominal voltage range	AC 19.2...28.8 V / DC 21.6...28.8 V
	Power consumption in operation	4 W
	Power consumption in rest position	1.5 W
	Power consumption for wire sizing	7 VA
	Connection supply / control	Cable 1 m, 4x 0.75 mm²
	Parallel operation	Yes (note the performance data)
Data bus communication	Communicative control	MP-Bus
	Number of nodes	MP-Bus max. 8
Functional data	Torque motor	10 Nm
	Torque variable	25%, 50%, 75% reduced
	Operating range Y	2...10 V
	Input impedance	100 kΩ
	Operating range Y variable	Start point 0.5...30 V End point 2.5...32 V
	Operating modes optional	Open/close 3-point (AC only) Modulating (DC 0...32 V)
	Position feedback U	2...10 V
	Position feedback U note	Max. 0.5 mA
	Position feedback U variable	Start point 0.5...8 V End point 2.5...10 V
	Position accuracy	±5%
	Direction of motion motor	selectable with switch 0/1
	Direction of motion variable	electronically reversible
	Direction of motion note	Y = 0 V: At switch position 0 (ccw rotation) / 1 (cw rotation)
	Manual override	with push-button, can be locked
	Angle of rotation	Max. 95°
	Angle of rotation note	can be limited on both sides with adjustable mechanical end stops
	Running time motor	35 s / 90°
	Running time motor variable	20...75 s
	Sound power level, motor	45 dB(A)
	Adaptation setting range	manual

Technical data

Functional data	Adaptation setting range variable	No action Adaptation when switched on Adaptation after pushing the manual override button
	Override control	MAX (maximum position) = 100% MIN (minimum position) = 0% ZS (intermediate position, AC only) = 50%
	Override control variable	MAX = (MIN + 32%)...100% MIN = 0%...(MAX – 32%) ZS = MIN...MAX
	Mechanical interface	Universal shaft clamp 8...26.7 mm
	Position indication	Mechanical, pluggable
Safety data	Protection class IEC/EN	III, Safety Extra-Low Voltage (SELV)
	Power source UL	Class 2 Supply
	Degree of protection IEC/EN	IP54
	Degree of protection NEMA/UL	NEMA 2
	Housing	UL Enclosure Type 2
	EMC	CE according to 2014/30/EU
	Certification IEC/EN	IEC/EN 60730-1 and IEC/EN 60730-2-14
	UL Approval	cULus according to UL60730-1A, UL60730-2-14 and CAN/CSA E60730-1 The UL marking on the actuator depends on the production site, the device is UL-compliant in any case
	Hygiene test	According to VDI 6022 Part 1
	Type of action	Type 1
	Rated impulse voltage supply / control	0.8 kV
	Pollution degree	3
	Ambient humidity	Max. 95% RH, non-condensing
	Ambient temperature	-30...50°C [-22...122°F]
	Storage temperature	-40...80°C [-40...176°F]
	Servicing	maintenance-free
Weight	Weight	0.79 kg

Safety notes

- This device has been designed for use in stationary heating, ventilation and air-conditioning systems and must not be used outside the specified field of application, especially in aircraft or in any other airborne means of transport.
- Outdoor application: Only possible if no (sea) water, snow, ice, sunlight or aggressive gases act directly on the device and if it is ensured that the ambient conditions remain within the limit values specified in the data sheet at all times.
- Only authorised specialists may carry out installation. All applicable legal or institutional installation regulations must be complied with during installation.
- The device may only be opened at the manufacturer's site. It does not contain any parts that can be replaced or repaired by the user.
- Cables must not be removed from the device.
- To calculate the torque required, the specifications supplied by the damper manufacturers concerning the cross-section and the design, as well as the installation situation and the ventilation conditions must be observed.
- The device contains electrical and electronic components and must not be disposed of as household refuse. All locally valid regulations and requirements must be observed.

Product features

Operating mode

Conventional operation:

The actuator is connected with an analogue control signal Y (note the operating range) and drives to the position defined. The measuring voltage U serves for the electrical display of the actuator position 0...100% and as control signal for other actuators.

Operation on Bus:

The actuator receives its digital control signal from the higher level controller via the MP-Bus and drives to the position defined. Connection U serves as communication interface and does not supply an analogue measuring voltage.

Converter for sensors

Connection option for a sensor (passive or active sensor or switching contact). The MP actuator serves as an analogue/digital converter for the transmission of the sensor signal via MP-Bus to the higher level system.

Configurable device

The factory settings cover the most common applications. Single parameters can be modified with Belimo Assistant 2.

Simple direct mounting

Simple direct mounting on the damper shaft with a universal shaft clamp, supplied with an anti-rotation mechanism to prevent the actuator from rotating.

Manual override

Manual override with push-button possible (the gear train is disengaged for as long as the button is pressed or remains locked).

Adjustable angle of rotation

Adjustable angle of rotation with mechanical end stops.

High functional reliability

The actuator is overload protected, requires no limit switches in intermediate positions and automatically stops when the end stop is reached (at rest).

Home position

The first time the supply voltage is switched on, i.e. at the time of commissioning, the actuator carries out a synchronisation. The synchronisation is in the home position (0%).

The actuator then moves into the position defined by the control signal.

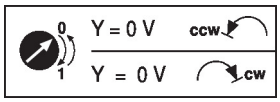

Adaptation and synchronisation

An adaptation can be triggered manually by pressing the "Adaptation" button or with Belimo Assistant 2. Both mechanical end stops are detected during the adaptation (entire setting range).

Automatic synchronisation after pressing the manual override button is configured. The synchronisation is in the home position (0%).

The actuator then moves into the position defined by the control signal.

A range of settings can be made using Belimo Assistant 2.

Accessories

Tools

Description	Type
Service tool for wired and wireless setup, on-site operation and troubleshooting.	Belimo Assistant 2
Belimo Assistant Link Bluetooth and USB to NFC and MP-Bus converter for configurable and communicative devices	LINK.10
Connecting cable 5 m, A: RJ11 6/4 LINK.10, B: 6-pin for connection to service socket	ZK1-GEN
Connecting cable 5 m, A: RJ11 6/4 LINK.10, B: free wire end for connection to MP/PP terminal	ZK2-GEN

Electrical accessories

Description	Type
Auxiliary switch 1x SPDT add-on	S1A
Auxiliary switch 2x SPDT add-on	S2A
Feedback potentiometer 140 Ω add-on	P140A
Feedback potentiometer 1 kΩ add-on	P1000A
Feedback potentiometer 10 kΩ add-on	P10000A
Signal converter voltage/current 100 kΩ 4...20 mA, Supply AC/DC 24 V	Z-UIC

Accessories

	Description	Type
	Positioner for wall mounting	SGA24
	Positioner for built-in mounting	SGE24
	Positioner for front-panel mounting	SGF24
	Positioner for wall mounting	CRP24-B1
	MP-Bus power supply for MP actuators	ZN230-24MP
Gateways	**Description**	**Type**
	Gateway MP to BACnet MS/TP	UK24BAC
	Gateway MP to Modbus RTU	UK24MOD
Mechanical accessories	**Description**	**Type**
	Actuator arm for standard shaft clamp (one-sided)	AH-25
	Shaft extension 240 mm ø20 mm for damper shaft ø8...22.7 mm	AV8-25
	Ball joint suitable for damper crank arm KH8	KG8
	Ball joint suitable for damper crank arm KH8 / KH10	KG10A
	Damper crank arm Slot width 8.2 mm, clamping range ø10...18 mm	KH8
	Shaft clamp one-sided, clamping range ø8...26 mm with insert, Multipack 20 pcs.	K-ENMA
	Shaft clamp one-sided, clamping range ø8...26 mm, Multipack 20 pcs.	K-ENSA
	Shaft clamp reversible, clamping range ø8...20 mm	K-NA
	Form fit insert 8x8 mm, Multipack 20 pcs.	ZF8-NMA
	Form fit insert 10x10 mm, Multipack 20 pcs.	ZF10-NSA
	Form fit insert 12x12 mm, Multipack 20 pcs.	ZF12-NSA
	Form fit insert 15x15 mm, Multipack 20 pcs.	ZF15-NSA
	Form fit insert 16x16 mm, Multipack 20 pcs.	ZF16-NSA
	Mounting kit for linkage operation for flat installation	ZG-NMA
	Anti-rotation mechanism 180 mm, Multipack 20 pcs.	Z-ARS180
	Baseplate extension for NM..A to NM..	Z-NMA
	Position indicator, Multipack 20 pcs.	Z-PI

Electrical installation

Supply from isolating transformer.

Parallel connection of other actuators possible. Observe the performance data.

Wire colours:
1 = black
2 = red
3 = white
5 = orange

MP-Bus

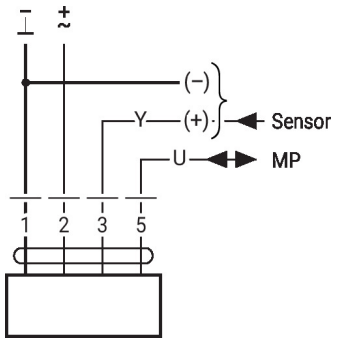

AC/DC 24 V, modulating

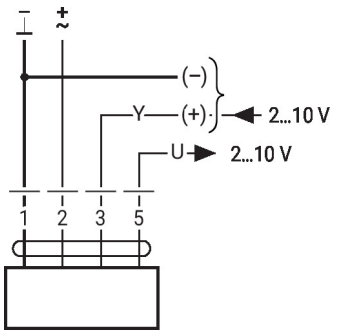

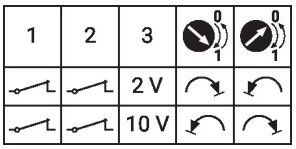

Further electrical installations

Functions with basic values (conventional mode)

Override control with AC 24 V with relay contacts

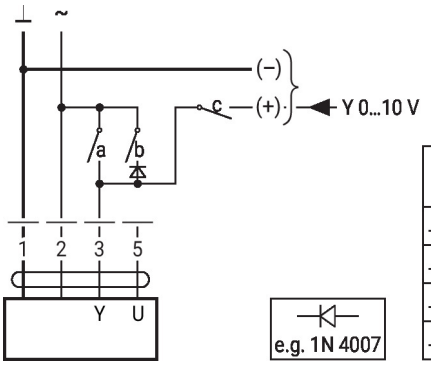

1	2	a	b	c	
					0 %
					ZS 50%
					100%
					Y

Override control with AC 24 V with rotary switch

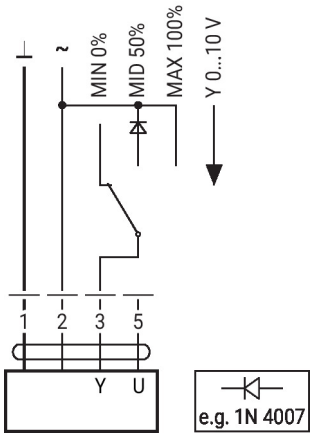

Control remotely 0...100% with positioner SG..

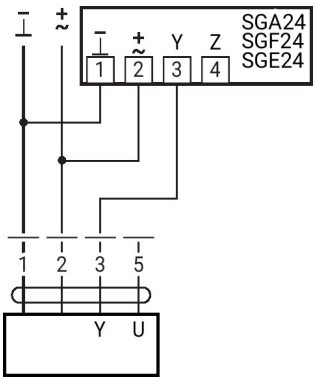

Minimum limit with positioner SG..

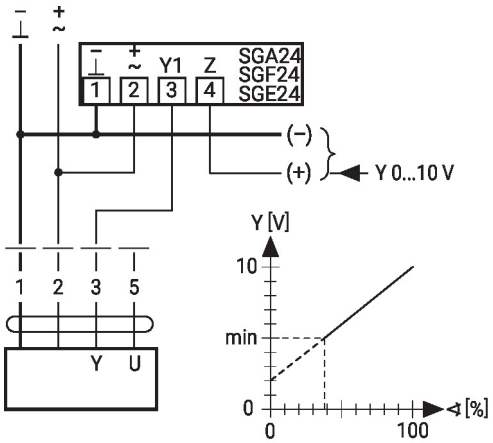

Primary/secondary operation (position-dependent)

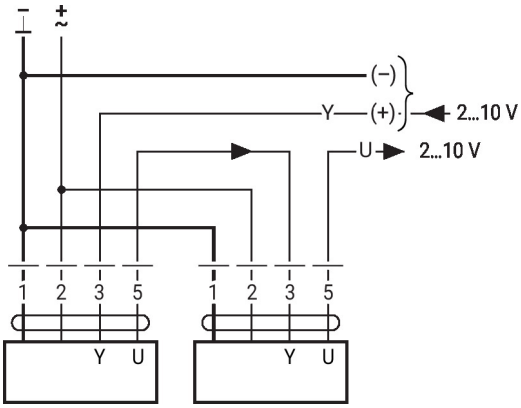

Control with 4...20 mA via external resistor

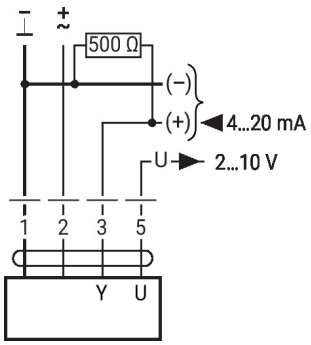

Caution:
The operating range must be set to DC 2...10 V.
The 500 Ohm resistor converts the 4...20 mA current signal to a voltage signal DC 2...10 V.

Further electrical installations

Functions with basic values (conventional mode)

Functional check

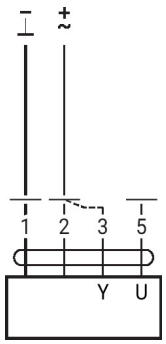

Procedure
1. Connect 24 V to connections 1 and 2
2. Disconnect connection 3:
– With direction of rotation 0: Actuator rotates to the left
– With direction of rotation 1: Actuator rotates to the right
3. Short-circuit connections 2 and 3:
– Actuator runs in opposite direction

MP-Bus

MP-Bus Network topology

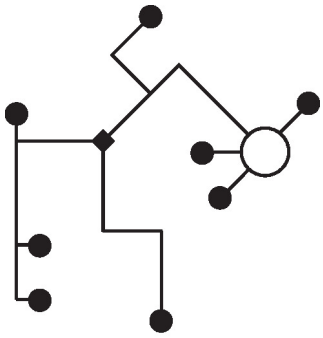

There are no restrictions for the network topology (star, ring, tree or mixed forms are permitted).
Supply and communication in one and the same 3-wire cable
• no shielding or twisting necessary
• no terminating resistors required

Connection on the MP-Bus

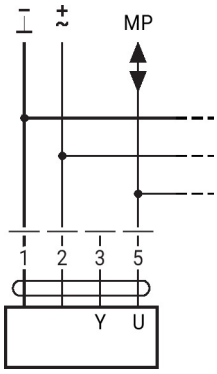

Max. 8 MP-Bus nodes

Connection of active sensors

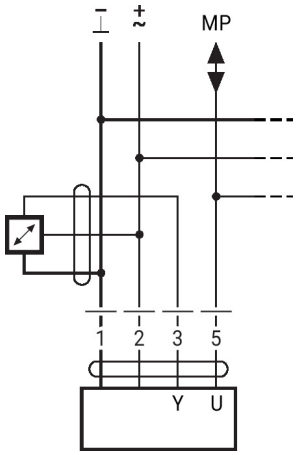

• Supply AC/DC 24 V
• Output signal 0...10 V (max. 0...32 V)
• Resolution 30 mV

Connection of external switching contact

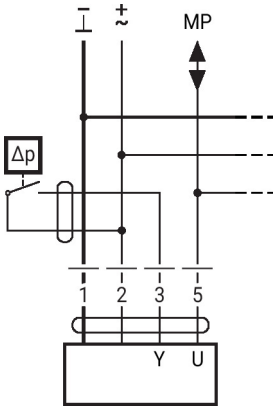

• Switching current 16 mA @ 24 V
• Start point of the operating range must be configured on the MP actuator as ≥0.5 V

Further electrical installations

MP-Bus

Connection of passive sensors

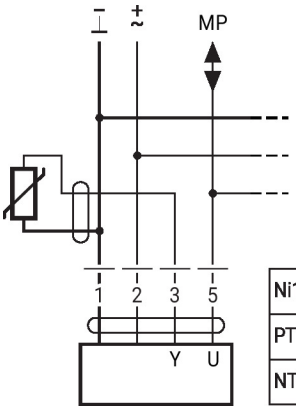

Ni1000	−28...+98°C	850...1600 Ω [2]
PT1000	−35...+155°C	850...1600 Ω [2]
NTC	−10...+160°C [1]	200 Ω...60 kΩ [2]

1) Depending on the type
2) Resolution 1 Ohm
Compensation of the measured value is recommended

Functions with specific parameters (configuration necessary)

Override control and limiting with AC 24 V with relay contacts

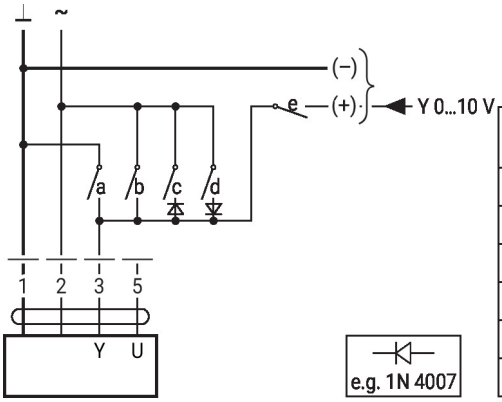

1	2	a	b	c	d	e	
							Close
							MIN
							ZS
							MAX
							Open
							Y

Control open/close

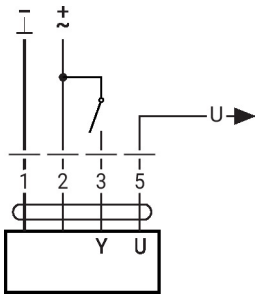

Control 3-point with AC 24 V

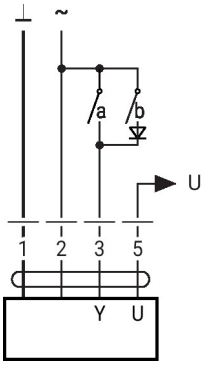

e.g. 1N 4007

1	2	3 (a)	3 (b)		
				stop	stop

Override control and limiting with AC 24 V with rotary switch

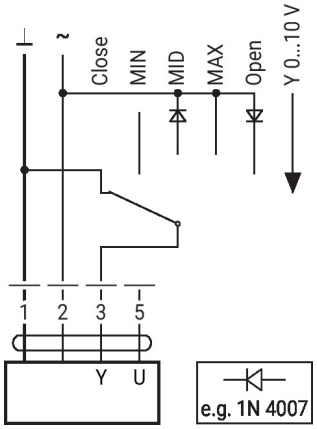

Caution:
The "Close" function is only guaranteed if the start point of the operating range is defined as min. 0.5 V.

Operating controls and indicators

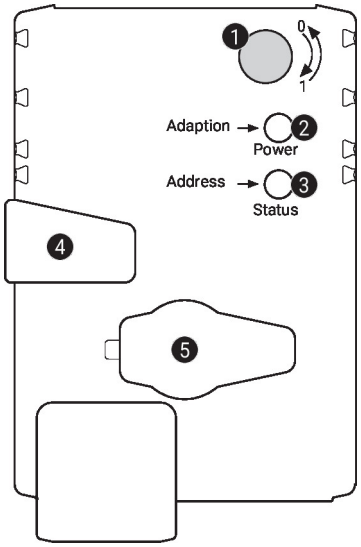

1 Direction-of-rotation switch

Switch over:	Direction of rotation changes

2 Push-button and LED display green

Off:	No power supply or malfunction
On:	In operation
Press button:	Triggers angle-of-rotation adaptation, followed by standard mode

3 Push-button and LED display yellow

Off:	Standard mode
On:	Adaptation or synchronisation process active
Flickering:	MP-Bus communication active
Flashing:	Request for addressing from MP client
Press button:	Confirmation of the addressing

4 Manual override button

Press button:	Gear train disengages, motor stops, manual override possible
Release button:	Gear train engages, synchronisation starts, followed by standard mode

5 Service plug
For connecting configuration and service tools

Check power supply connection

2 Off and 3 On	Possible wiring error in power supply

Service

Using Belimo Assistant 2, device parameters can be modified. Belimo Assistant 2 can operate on a smartphone, tablet or PC. The available connection options vary depending on the hardware on which Belimo Assistant 2 is installed.

For more information about Belimo Assistant 2, refer to the Quick Guide – Belimo Assistant 2.

Wired connection

Belimo devices can be accessed by connecting Belimo Assistant Link to the USB port on a PC or laptop and to the Service Socket or MP-Bus wire on the device.

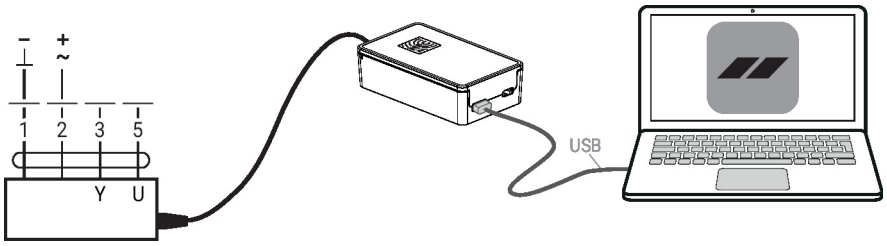

Dimensions

Shaft length

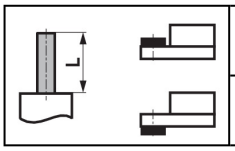	Min. 40
	Min. 20 mm [0.75"]

Clamping range

	8...26.7	≥8	≤26.7
*	8...20	≥8	≤20

*Option: Shaft clamp mounted below (accessories K-NA needed)

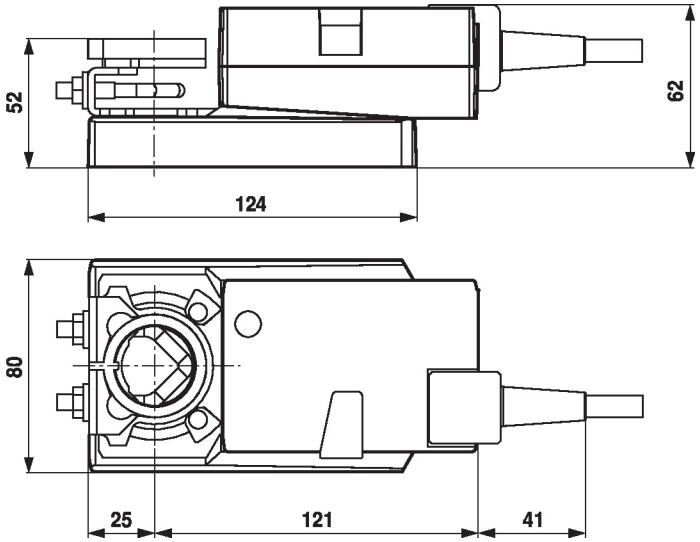

Further documentation

- Overview MP Cooperation Partners
- Tool connections
- Introduction to MP-Bus Technology
- Quick Guide – Belimo Assistant 2

Application notes

- For digital control of actuators in VAV applications patent EP 3163399 must be considered.