Average temperature sensor

Pt1000 version is supplied with one continuous sensing element across the whole length of the probe to ensure optimum accuracy and eliminate air stratification problems.

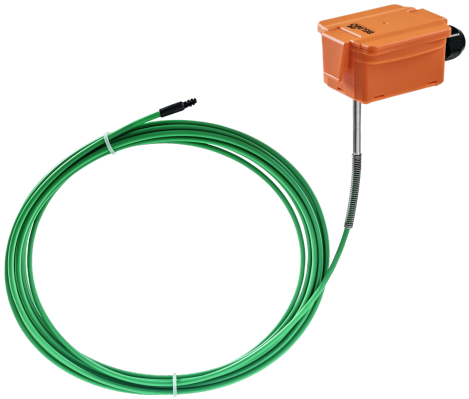

Type Overview

Type	Output signal	Probe length
01MT-1B4	Pt1000	3 m
01MT-1B5	Pt1000	6 m
01MT-1B8	Pt1000	15 m

Technical data

Electrical data	Electrical connection	Pluggable spring loaded terminal block max. 2.5 mm²
	Cable entry	Cable gland with strain relief ø6...8 mm
Functional data	Medium	Air
Measuring data	Measured values	Temperature
Specification temperature passive	Measuring range	-35...70°C [-30...160°F]
	Measuring current	<0.3 mA @ 0°C [32°F]
	Accuracy temperature	Class B, ±0.3°C @ 0°C [±0.5°F @ 32° F]
Safety data	Protection class IEC/EN	III, Protective Extra-Low Voltage (PELV)
	Power source UL	Class 2 Supply
	Degree of protection IEC/EN	IP65
	Degree of protection NEMA/UL	NEMA 4X
	Housing	UL Enclosure Type 4X
	EU Conformity	CE Marking
	Certification IEC/EN	IEC/EN 60730-1
	Quality Standard	ISO 9001
	UL Approval	cULus acc. to UL60730-1A/-2-9, CAN/CSA E60730-1/-2-9
	Type of action	Type 1
	Rated impulse voltage supply	0.8 kV
	Pollution degree	3
	Ambient humidity	Max. 95% RH, non-condensing
	Ambient temperature	-35...50°C [-30...120°F]
	Fluid temperature	-35...70°C [-30...160°F]
	Housing surface temperature	Max. 90°C [195°F]
Materials	Housing	Cover: PC, orange Bottom: PC, orange Seal: NBR70, black UV resistant
	Cable gland	PA6, black

Safety notes

This device has been designed for use in stationary heating, ventilation and air-conditioning systems and must not be used outside the specified field of application. Unauthorised modifications are prohibited. The product must not be used in relation with any equipment that in case of a failure may threaten humans, animals or assets.

Ensure all power is disconnected before installing. Do not connect to live/operating equipment.

Only authorised specialists may carry out installation. All applicable legal or institutional installation regulations must be complied with during installation.

The device contains electrical and electronic components and must not be disposed of as household refuse. All locally valid regulations and requirements must be observed.

Remarks

General remarks concerning sensors

Due to self-heating with 2 wire passive sensors, the supply wire current affects the measurement accuracy. So the supply current should not be higher than the measuring current values specified in this data sheet.

When using lengthy connecting cables (depending on the cross section used), the cable resistance must be taken into account. The lower the impedance of the sensor used, the greater the effect of the line resistance on the measurement, because it generates an offset.

Parts included

Description	Type
Mounting kit, with 6 mounting brackets	A-22D-A08
Mounting plate S housing	A-22D-A09

Accessories

Optional accessories

Description	Type
Connection adapter flex conduit, M20x1.5, for cable gland 1x 6 mm, Multipack 10 pcs.	A-22G-A01.1
Mounting kit, with 6 mounting brackets	A-22D-A08

Wiring diagram

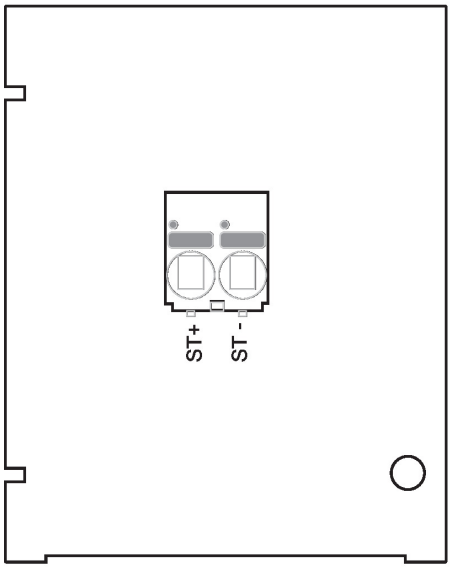

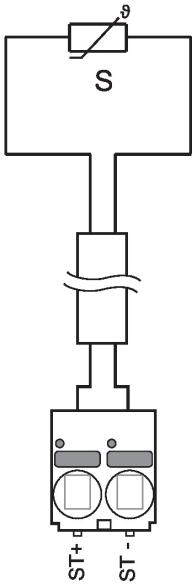

Dimensions

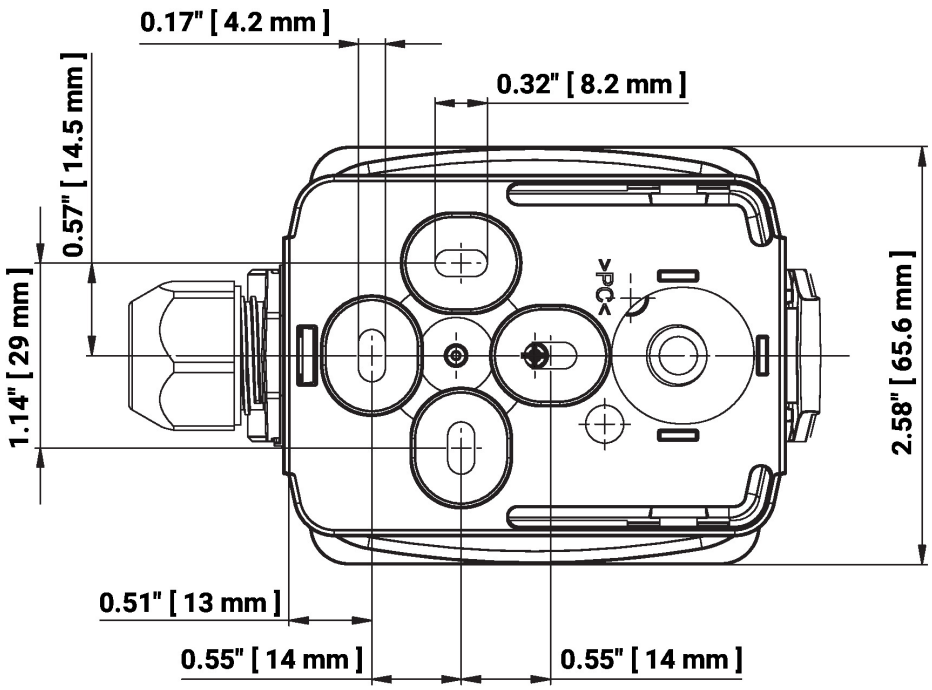

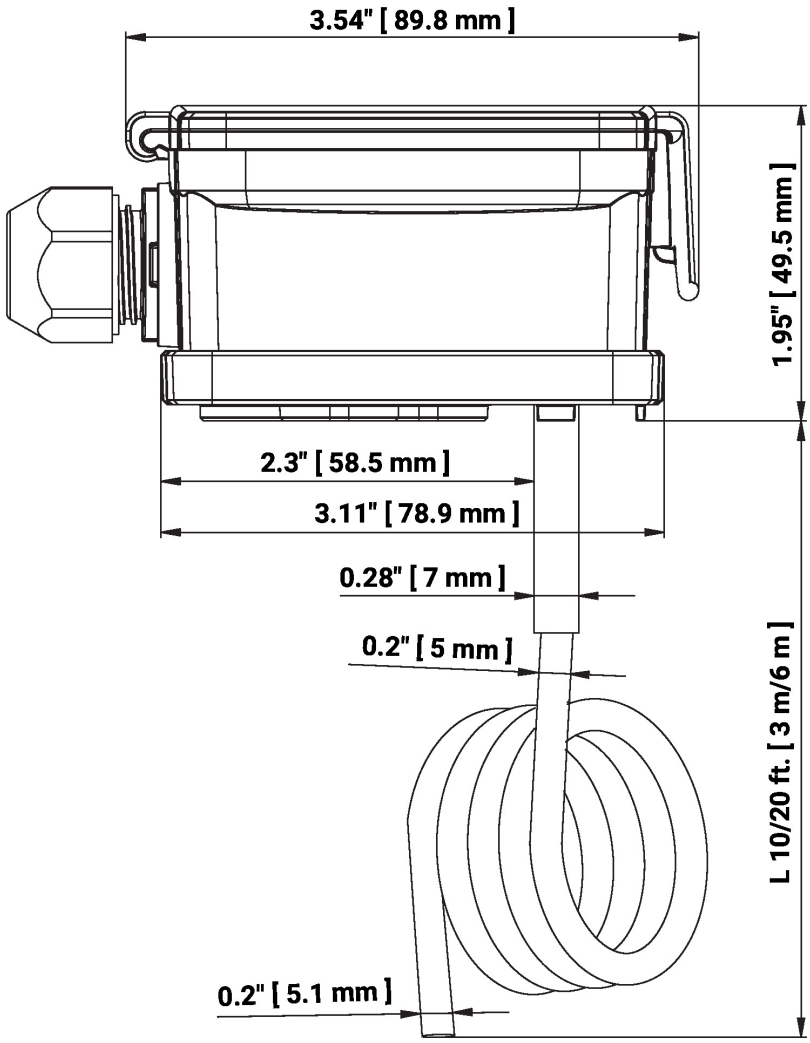

L = Probe length

Type	Probe length	Weight
01MT-1B4	3 m	0.17 kg
01MT-1B5	6 m	0.21 kg

Dimensions

Type	Probe length	Weight
01MT-1B8	15 m	0.21 kg

Further documentation

- Installation instructions
- Resistance characteristics