Configurable rotary actuator fail-safe for adjusting dampers in technical building installations

- Air damper size up to approx. 4 m²
- Torque motor 20 Nm
- Nominal voltage AC/DC 24 V
- Control modulating 2...10 V variable
- Position feedback 2...10 V variable

Picture may differ from product

Technical data

Electrical data	Nominal voltage	AC/DC 24 V
	Nominal voltage frequency	50/60 Hz
	Nominal voltage range	AC 19.2...28.8 V / DC 21.6...28.8 V
	Power consumption in operation	8.5 W
	Power consumption in rest position	3.5 W
	Power consumption for wire sizing	11 VA
	Connection supply / control	Cable 1 m, 4x 0.75 mm²
	Parallel operation	Yes (note the performance data)
Functional data	Torque motor	20 Nm
	Torque fail-safe	20 Nm
	Operating range Y	2...10 V
	Input impedance	100 kΩ
	Operating range Y variable	Start point 0.5...30 V End point 2.5...32 V
	Operating modes optional	Open/close 3-point (AC only) Modulating (DC 0...32 V)
	Position feedback U	2...10 V
	Position feedback U note	Max. 0.5 mA
	Position feedback U variable	Start point 0.5...8 V End point 2.5...10 V
	Position accuracy	±5%
	Direction of motion motor	selectable with switch L/R
	Direction of motion variable	electronically reversible
	Direction of motion fail-safe	selectable by mounting L/R
	Manual override	by means of hand crank and locking switch
	Angle of rotation	Max. 95°
	Angle of rotation note	adjustable starting at 33% in 2.5% steps (with mechanical end stop)
	Running time motor	150 s / 90°
	Running time motor variable	70...220 s
	Running time fail-safe	<20 s @ -20...50°C, <60 s @ -30°C
	Sound power level, motor	40 dB(A)
	Adaptation setting range	manual

Functional data	Adaptation setting range variable	No action Adaptation when switched on Adaptation after using the hand crank
	Override control	MAX (maximum position) = 100% MIN (minimum position) = 0% ZS (intermediate position, AC only) = 50%
	Override control variable	MAX = (MIN + 32%)...100% MIN = 0%...(MAX – 32%) ZS = MIN...MAX
	Mechanical interface	Universal shaft clamp 10...25.4 mm
	Position indication	Mechanical
	Service life	Min. 60'000 fail-safe positions with piggy-back applications min. 30'000 fail-safe positions
Safety data	Protection class IEC/EN	III, Safety Extra-Low Voltage (SELV)
	Power source UL	Class 2 Supply
	Degree of protection IEC/EN	IP54
	Degree of protection NEMA/UL	NEMA 2
	Housing	UL Enclosure Type 2
	EMC	CE according to 2014/30/EU
	Certification IEC/EN	IEC/EN 60730-1 and IEC/EN 60730-2-14
	UL Approval	cULus according to UL60730-1A, UL60730-2-14 and CAN/CSA E60730-1 The UL marking on the actuator depends on the production site, the device is UL-compliant in any case
	Type of action	Type 1.AA
	Rated impulse voltage supply / control	0.8 kV
	Pollution degree	3
	Ambient humidity	Max. 95% RH, non-condensing
	Ambient temperature	-30...50°C [-22...122°F]
	Storage temperature	-40...80°C [-40...176°F]
	Servicing	maintenance-free
Weight	Weight	2.2 kg

Safety notes

- This device has been designed for use in stationary heating, ventilation and air-conditioning systems and must not be used outside the specified field of application, especially in aircraft or in any other airborne means of transport.
- Outdoor application: only possible in case that no (sea) water, snow, ice, insolation or aggressive gases interfere directly with the device and that it is ensured that the ambient conditions remain within the thresholds according to the data sheet at any time.
- Only authorised specialists may carry out installation. All applicable legal or institutional installation regulations must be complied with during installation.
- The device may only be opened at the manufacturer's site. It does not contain any parts that can be replaced or repaired by the user.
- Cables must not be removed from the device.
- To calculate the torque required, the specifications supplied by the damper manufacturers concerning the cross-section and the design, as well as the installation situation and the ventilation conditions must be observed.
- The device contains electrical and electronic components and must not be disposed of as household refuse. All locally valid regulations and requirements must be observed.

Product features

Operating mode

The actuator moves the damper to the operating position at the same time as tensioning the return spring. The damper is turned back to the fail-safe position by spring force when the supply voltage is interrupted.

The actuator is connected with an analogue control signal Y (note the operating range) and drives to the position defined. The measuring voltage U serves for the electrical display of the damper position 0...100% and as control signal for other actuators.

Configurable device

The factory settings cover the most common applications. Single parameters can be modified with Belimo Assistant 2 or ZTH EU.

Simple direct mounting

Simple direct mounting on the damper shaft with a universal shaft clamp, supplied with an anti-rotation mechanism to prevent the actuator from rotating.

Manual override

By using the hand crank the damper can be actuated manually and engaged with the locking switch at any position. Unlocking is carried out manually or automatically by applying the operating voltage.

Adjustable angle of rotation

Adjustable angle of rotation with mechanical end stops.

High functional reliability

The actuator is overload protected, requires no limit switches and automatically stops when the end stop is reached.

Home position

The first time the supply voltage is switched on, i.e. at the time of commissioning, the actuator carries out a synchronisation. The synchronisation is in the home position (0%).

The actuator then moves into the position defined by the control signal.

Adaptation and synchronisation

An adaptation can be triggered manually by pressing the "Adaptation" button or with the PC-Tool. Both mechanical end stops are detected during the adaptation (entire setting range). Automatic synchronisation after actuating the hand crank is programmed. The synchronisation is in the home position (0%).

The actuator then moves into the position defined by the control signal.

A range of settings can be made using Belimo Assistant 2.

Accessories

Tools

Description	Type
Service tool, with ZIP-USB function, for configurable and communicative Belimo actuators, VAV controller and HVAC performance devices	ZTH EU

Accessories

	Description	Type
	Service tool for wired and wireless setup, on-site operation and troubleshooting.	Belimo Assistant 2
	Adapter for Service-Tool ZTH	MFT-C
	Connecting cable 5 m, A: RJ11 6/4 LINK.10, B: 6-pin for connection to service socket	ZK1-GEN
	Connecting cable 5 m, A: RJ11 6/4 LINK.10, B: free wire end for connection to MP/PP terminal	ZK2-GEN
	Belimo Assistant Link Bluetooth and USB to NFC and MP-Bus converter for configurable and communicative devices	LINK.10

Electrical accessories	Description	Type
	Auxiliary switch 2x SPDT	S2A-F
	Feedback potentiometer 1 kΩ	P1000A-F
	Signal converter voltage/current 100 kΩ 4...20 mA, Supply AC/DC 24 V	Z-UIC
	Positioner for wall mounting	SGA24
	Positioner for built-in mounting	SGE24
	Positioner for front-panel mounting	SGF24
	Positioner for wall mounting	CRP24-B1

Mechanical accessories	Description	Type
	Shaft extension 240 mm ø20 mm for damper shaft ø8...22.7 mm	AV8-25
	End stop indicator	IND-AFB
	Shaft clamp reversible, for central mounting, for damper shafts ø12.7 / 19.0 / 25.4 mm	K7-2
	Ball joint suitable for damper crank arm KH8 / KH10	KG10A
	Ball joint suitable for damper crank arm KH8	KG8
	Damper crank arm Slot width 8.2 mm, clamping range ø10...18 mm	KH8
	Actuator arm, for 3/4" shafts, clamping range ø10...22 mm, Slot width 8.2 mm	KH-AFB
	Form fit insert 10x10 mm, Multipack 20 pcs.	ZF10-NSA-F
	Form fit insert 12x12 mm, Multipack 20 pcs.	ZF12-NSA-F
	Form fit insert 15x15 mm, Multipack 20 pcs.	ZF15-NSA-F
	Form fit insert 16x16 mm, Multipack 20 pcs.	ZF16-NSA-F
	Mounting kit for linkage operation for flat and side installation	ZG-AFB
	Baseplate extension	Z-SF
	Anti-rotation mechanism 230 mm, Multipack 20 pcs.	Z-ARS230L
	Hand crank 63 mm	ZKN2-B

Electrical installation

Supply from isolating transformer.

Parallel connection of other actuators possible. Observe the performance data.

Wire colours:
1 = black
2 = red
3 = white
5 = orange

Electrical installation

AC/DC 24 V, modulating

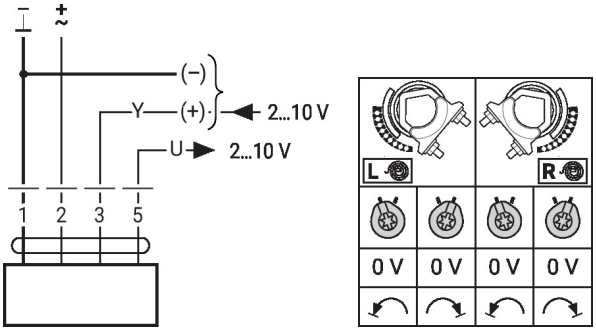

Wiring diagram piggy-back operation (mechanically coupled actuators)

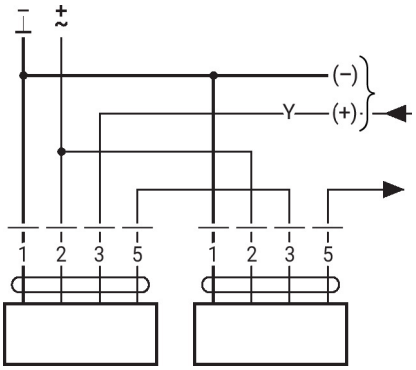

- Max. 2 actuators in primary/secondary operation
- Primary/secondary operation is permitted only on one fixed shaft or on two mechanically coupled shafts
- The programming of the primary actuator is adopted by the secondary actuator

Further electrical installations

Functions with basic values (conventional mode)

Override control with AC 24 V with relay contacts

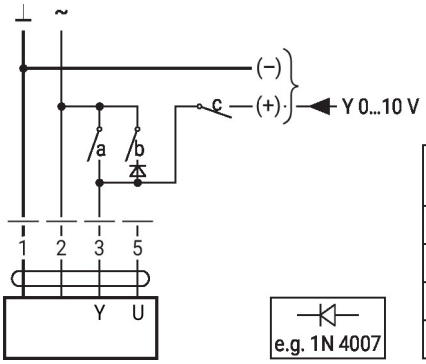

1	2	a	b	c	
L	L	–	–	–	0 %
L	L	–	L	–	ZS 50%
L	L	L	–	–	100%
L	L	–	–	L	Y

Override control with AC 24 V with rotary switch

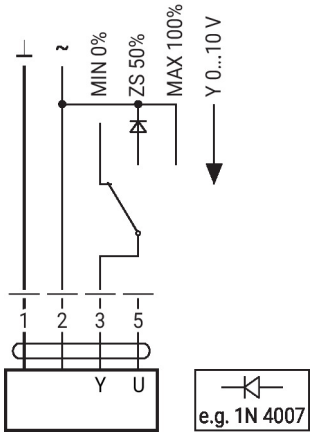

Functions with basic values (conventional mode)

Control remotely 0...100% with positioner SG..

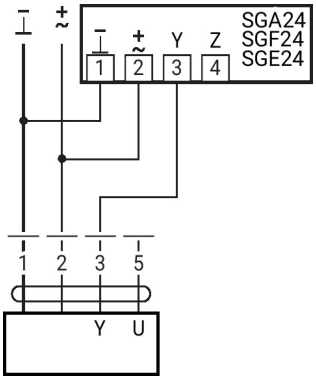

Minimum limit with positioner SG..

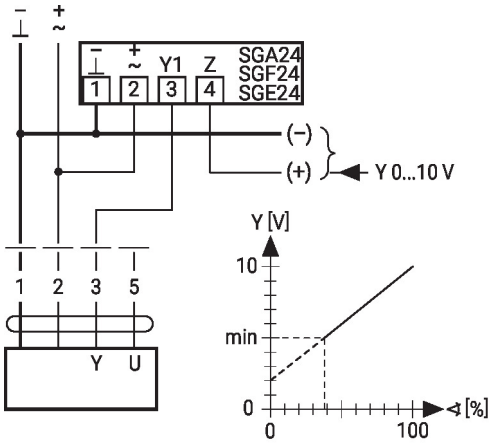

Control with 4...20 mA via external resistor

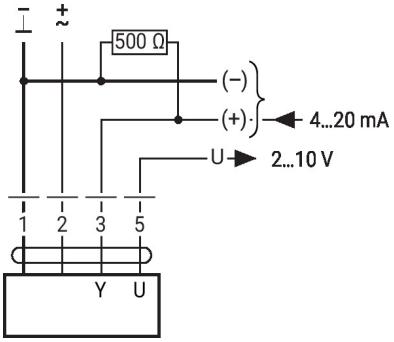

Caution:
The operating range must be set to DC 2...10 V.
The 500 Ohm resistor converts the 4...20 mA current signal to a voltage signal DC 2...10 V.

Functional check

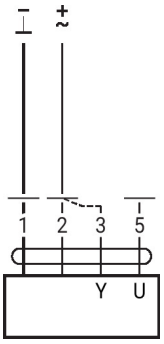

Procedure
1. Connect 24 V to connections 1 and 2
2. Disconnect connection 3:
– With direction of rotation 0: Actuator rotates to the left
– With direction of rotation 1: Actuator rotates to the right
3. Short-circuit connections 2 and 3:
– Actuator runs in opposite direction

Further electrical installations

Functions with specific parameters (configuration necessary)

Override control and limiting with AC 24 V with relay contacts

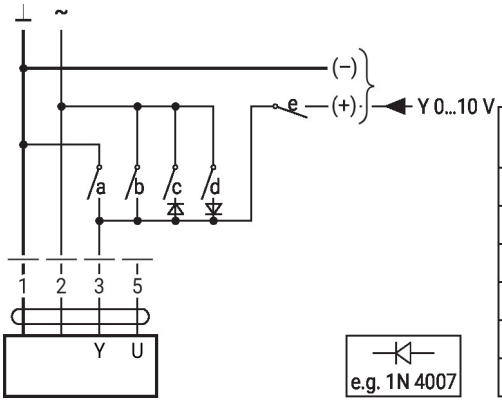

1	2	a	b	c	d	e	
							Close
							MIN
							ZS
							MAX
							Open
							Y

Control open/close

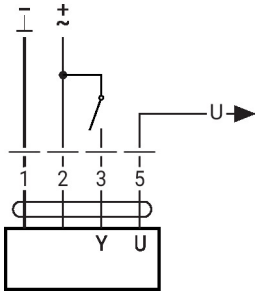

Override control and limiting with AC 24 V with rotary switch

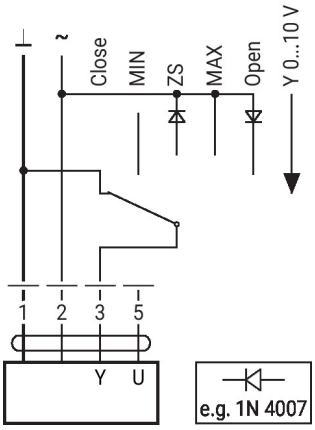

Caution:
The "Close" function is only guaranteed if the start point of the operating range is defined as min. 0.5 V.

Control 3-point with AC 24 V

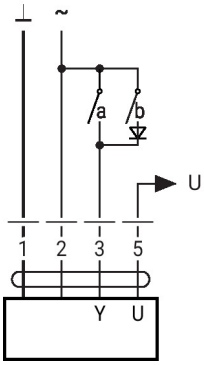

e.g. 1N 4007

1	2	3 (a)	3 (b)	L		R	
				stop	stop	stop	stop

Operating controls and indicators

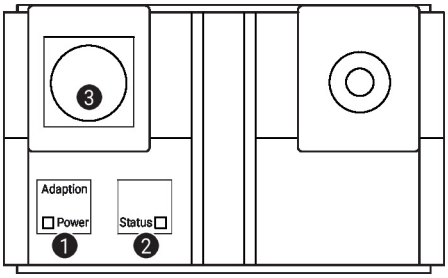

1 Membrane key and LED display green

Off:	No power supply or malfunction
On:	In operation
Press button:	Triggers angle-of-rotation adaptation, followed by standard mode

2 Membrane key and LED display yellow

Off:	Standard mode
On:	Adaptation or synchronisation process active
Press button:	No function

3 Service plug
For connecting configuration and service tools

Operating elements
The manual override, locking switch and direction-of-rotation switch elements are available on both sides

Service

Wired connection

The device can be configured by ZTH EU via the service socket.
For an extended configuration, Belimo Assistant 2 can be connected.

Connection ZTH EU / Belimo Assistant 2

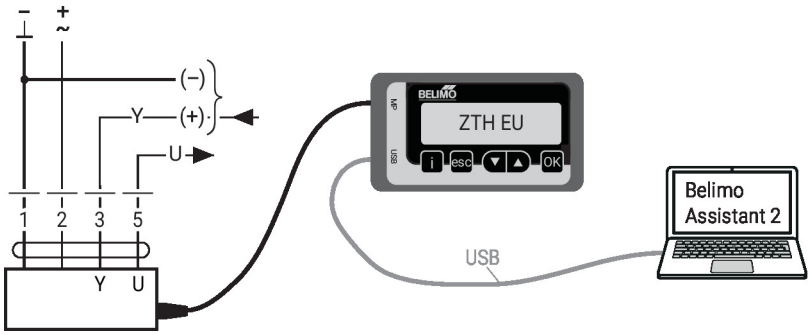

Dimensions

Spindle length

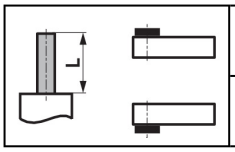	Min. 85
	Min. 15

Clamping range

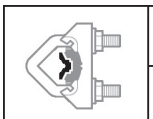	○	□	◇
	10...22	10	14...25.4
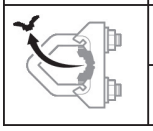	○	□	
	19...25.4	12...18	

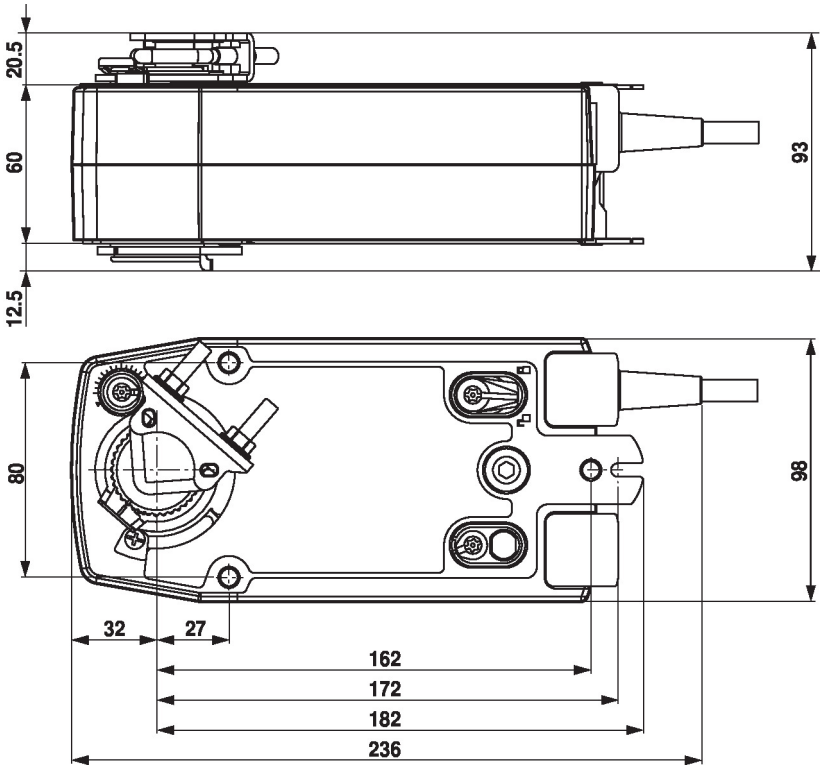

Further documentation

• Quick Guide – Belimo Assistant 2