Pipe connector

- internal thread G to internal thread Rp
- incl. gasket

Picture may differ from product

Type Overview

Type	DN	G ["]	Rp ["]
ZREV15F	15	3/4	1/2
ZREV20F	20	1	3/4
ZREV25F	25	1 1/4	1
ZREV32F	32	1 1/2	1 1/4
ZREV40F	40	2	1 1/2
ZREV50F	50	2 1/2	2

Technical data

Functional data	Fluid	Water, water with glycol up to max. 60% vol.
	Fluid temperature	-20...120°C [-4...248°F]
	Pipe connection	Internal thread G according to ISO 228-1 Rp according to ISO 7-1
Materials	Used materials	Nickel-plated brass

Safety notes

- This accessory has been designed for use in stationary heating, ventilation and air-conditioning systems and must not be used outside the specified field of application, especially in aircraft or in any other airborne means of transport.
- Only authorised specialists may carry out installation. All applicable legal or institutional installation regulations must be complied with during installation.
- The accessory may not be disposed of as household refuse. All locally valid regulations and requirements must be observed.

General notes

Delivery notes In the scope of delivery: union nut (G thread), insert (Rp thread), gasket

Dimensions

Dimensional drawings

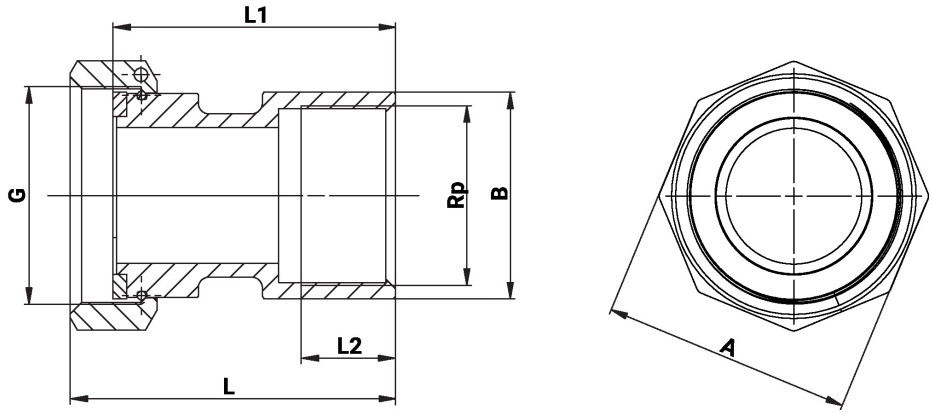

L2: Maximum screwing depth.

Type	DN	G [“]	Rp [“]	L [mm]	L1 [mm]	L2 [mm]	A [mm]	B [mm]	kg
ZREV15F	15	3/4	1/2	47.5	42	15	30	25	0.10
ZREV20F	20	1	3/4	54	47.5	16	37	31	0.18
ZREV25F	25	1 1/4	1	60	52	19	46	38	0.27
ZREV32F	32	1 1/2	1 1/4	67	58	21	52	48	0.40
ZREV40F	40	2	1 1/2	70	60	21	64	54	0.54
ZREV50F	50	2 1/2	2	80	68.5	25	81	66	0.90