MP BUS

Characterised control valve with sensor-operated flow control with fail-safe, 2-way, Flange, PN 16 (EPIV)

- Nominal voltage AC/DC 24 V
- Control modulating, communicative
- For closed water systems
- For modulating control of air-handling and heating systems on the water side
- Communication via Belimo MP-Bus or conventional control
- Conversion of active sensor signals and switching contacts

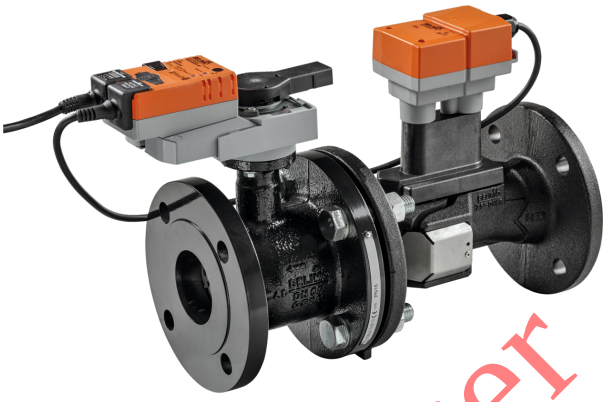

Picture may differ from product

Products no longer available

Type Overview

Type	DN	V'nom [l/s]	V'nom [l/min]	V'nom [m³/h]	Kvs theor. [m³/h]	PN
EP065F+KMP	65	8	480	28.8	50	16
EP080F+KMP	80	11	660	39.6	75	16
EP100F+KMP	100	20	1200	72	127	16
EP125F+KMP	125	31	1860	111.6	195	16
EP150F+KMP	150	45	2700	162	254	16

Kvs theor.: theoretical Kvs value for pressure drop calculation

Technical data

Electrical data	Nominal voltage	AC/DC 24 V
	Nominal voltage frequency	50/60 Hz
	Nominal voltage range	AC 19.2...28.8 V / DC 21.6...28.8 V
	Power consumption in operation	10 W (DN 65...80) 13 W (DN 100...150)
	Power consumption in rest position	5 W (DN 65...80) 7 W (DN 100...150)
	Power consumption for wire sizing	20 VA (DN 65...80) 24 VA (DN 100...150)
	Connection supply / control	Cable 1 m, 4x 0.75 mm²
	Parallel operation	Yes (note the performance data)
Data bus communication	Communicative control	MP-Bus
	Number of nodes	MP-Bus max. 8
Functional data	Operating range Y	2...10 V
	Operating range Y variable	Start point 0.5...24 V End point 8.5...32 V
	Input impedance	100 kΩ
	Operating modes optional	Modulating (DC 0...32 V)
	Position feedback U	2...10 V
	Position feedback U note	Max. 1 mA
	Position feedback U variable	Start point 0.5...8 V End point 2...10 V
	Setting fail-safe position	NC/NO or adjustable 0...100% (POP rotary knob)
	Bridging time (PF) variable	0...10 s
	Running time fail-safe	35 s / 90°
	Sound power level motor	45 dB(A)
	Sound power level, fail-safe	61 dB(A)
	V'max adjustable	30...100% of V'nom

Technical data

Functional data	Control accuracy	±5% (of 25...100% V'nom) @ 20°C / Glycol 0% vol.
	Control accuracy note	±10% (of 25...100% V'nom) @ -10...120°C / Glycol 0...50% vol.
	Min. controllable flow	1% of V'nom
	Fluid	Water, water with glycol up to max. 50% vol.
	Fluid temperature	-10...120°C [14...248°F]
	Close-off pressure	Δps 690 kPa
	Differential pressure	Δpmax 340 kPa
	Flow characteristic	equal percentage (VDI/VDE 2173), optimised in the opening range
	Flow characteristic note	switchable to linear (VDI/VDE 2173)
	Leakage rate	air-bubble tight, leakage rate A (EN 12266-1)
	Pipe connection	Flange according to EN 1092-2
	Installation orientation	upright to horizontal (in relation to the spindle)
	Servicing	maintenance-free
	Manual override	with push-button
Flow measurement	Measuring principle	Ultrasonic flow measurement
	Measuring accuracy flow	±2% (of 25...100% V'nom) @ 20°C / glycol 0% vol.
	Measuring accuracy flow note	±6% (of 25...100% V'nom) @ -10...120°C / glycol 0...50% vol.
	Min. flow measurement	0.5% of V'nom
Safety data	Protection class IEC/EN	III, Safety Extra-Low Voltage (SELV)
	Degree of protection IEC/EN	IP54
	Pressure equipment directive	CE according to 2014/68/EU
	EMC	CE according to 2014/30/EU
	Type of action	Type 1.AA
	Rated impulse voltage supply / control	0.8 kV
	Pollution degree	3
	Ambient humidity	Max. 95% RH, non-condensing
	Ambient temperature	-30...50°C [-22...122°F]
	Storage temperature	-20...80°C [-4...176°F]
Materials	Valve body	EN-GJL-250 (GG 25)
	Body finish	with protective paint
	Flow measuring pipe	EN-GJL-250 (GG 25), with protective paint
	Closing element	Stainless steel AISI 316
	Spindle	Stainless steel AISI 304
	Spindle seal	EPDM
	Seat	PTFE, O-ring Viton
Terms	Abbreviations	POP = Power off position / fail-safe position PF = Power fail delay time / bridging time

Products no longer available

Safety notes

- This device has been designed for use in stationary heating, ventilation and air-conditioning systems and must not be used outside the specified field of application, especially in aircraft or in any other airborne means of transport.
- Outdoor application: Only possible if no (sea) water, snow, ice, sunlight or aggressive gases act directly on the device and if it is ensured that the ambient conditions remain within the limit values specified in the data sheet at all times.
- Only authorised specialists may carry out installation. All applicable legal or institutional installation regulations must be complied with during installation.
- The device contains electrical and electronic components and must not be disposed of as household refuse. All locally valid regulations and requirements must be observed.

Product features

Operating mode

The HVAC performance device is comprised of three components: characterised control valve (CCV), measuring pipe with flow sensor and the actuator itself. The adjusted maximum flow (V'max) is assigned to the maximum control signal (typically 10 V / 100%). The HVAC performance device can be controlled via communicative or analogue signals. The fluid is detected by the sensor in the measuring pipe and is applied as the flow value. The measured value is balanced with the setpoint. The actuator corrects the deviation by changing the valve position. The angle of rotation α varies according to the differential pressure through the control element (see flow curves).

With the supply voltage the integrated capacitors will be charged.

Interrupting the supply voltage causes the valve to be moved to the selected fail-safe position by means of stored electrical energy.

Flow rate curves

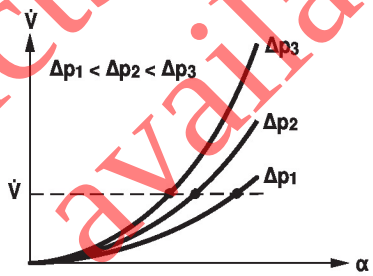

Products no longer available

Product features

Pre-charging time (start up)

The capacitor actuators require a pre-charging time. This time is used for charging the capacitors up to a usable voltage level. This ensures that, in the event of a power failure, the actuator can move at any time from its current position into the preset fail-safe position.

The duration of the pre-charging time depends mainly on following factors:

– Duration of the power failure

– PF delay time (bridging time)

Typical pre-charging time

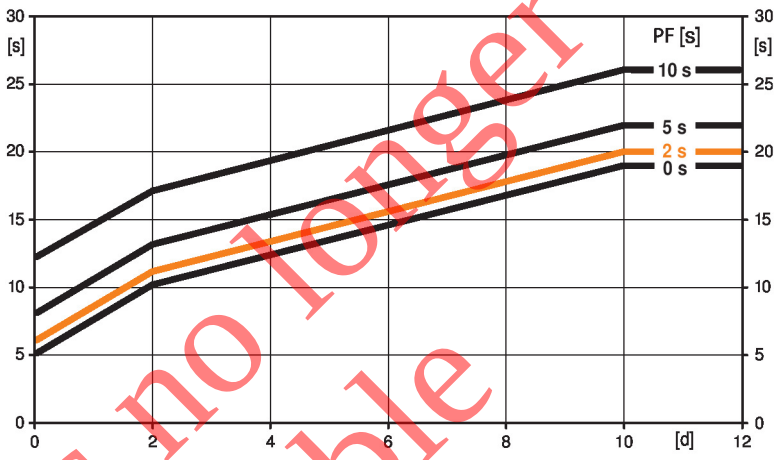

[d] = Power failure in days
[s] = Pre-charging time in seconds
PF[s] = Bridging time
Calculation example: Given a power failure of 3 days and a bridging time (PF) set at 5 s, the actuator requires a pre-charging time of 14 s after the power has been reconnected (see graphic).

PF [s]	[d] 0	1	2	7	≥10
0	5	8	10	15	19
2	6	9	11	16	20
5	8	11	13	18	22
10	12	15	17	22	26
	[s]				

Delivery condition (capacitors)

The actuator is completely discharged after delivery from the factory, which is why the actuator requires approximately 20 s pre-charging time before initial commissioning in order to bring the capacitors up to the required voltage level.

Bridging time

Power failures can be bridged up to a maximum of 10 s.

In the event of a power failure, the actuator will remain stationary in accordance with the set bridging time. If the power failure is greater than the set bridging time, the actuator will move into the selected fail-safe position.

The bridging time set at the factory is 2 s. It can be modified on site in operation by means of the Belimo service tool MFT-P.

Settings: The rotary knob must not be set to the "Tool" position!

For retroactive adjustments of the bridging time with the Belimo service tool MFT-P or with the ZTH EU adjustment and diagnostic device only the values need to be entered.

Setting fail-safe position

The rotary knob fail-safe position can be used to adjust the desired fail-safe position 0...100% in 10% increments. The rotary knob always refers to the adapted angle of rotation range. In the event of a power failure, the actuator will move into the selected fail-safe position.

Settings: The rotary knob must be set to the «Tool» position for retroactive settings of the fail-safe position with the Belimo service tool MFT-P. Once the rotary knob is set back to the range 0...100%, the manually set value will have positioning authority.

Products no longer available

Product features

Transmission behaviour HE

Heat exchanger transmission behaviour

Depending on the construction, temperature spread, fluid characteristics and hydronic circuit, the power Q is not proportional to the water volumetric flow V' (Curve 1). With the classical type of temperature control, an attempt is made to maintain the control signal Y proportional to the power Q (Curve 2). This is achieved by means of an equal-percentage flow characteristic (Curve 3).

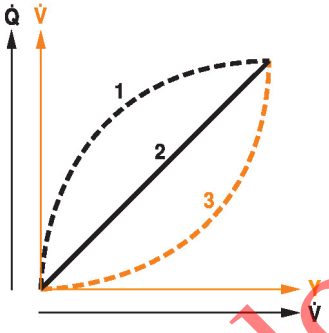

Products no longer available

Product features

Control characteristics

The fluid velocity is measured in the measuring component (sensor electronics) and converted to a flow rate signal.

The control signal Y corresponds to the power Q via the exchanger, the flow is controlled in the EPIV. The control signal Y is converted into an equal-percentage characteristic curve and provided with the V'max value as the new reference variable w. The momentary control deviation forms the control signal Y1 for the actuator.

The specially configured control parameters in connection with the precise flow rate sensor ensure a stable quality of control. They are, however, not suitable for rapid control processes, such as domestic water control. U5 displays the measured flow as voltage (factory setting).

Configuring V'max with ZTH EU:

U5 refers to the respective V'nom, i.e. if V'max is e.g. 50% of V'nom, then Y = 10 V, U5 = 5 V.

Configuring V'max with PC-Tool:

In the PC-Tool, the maximum flow rate to which U5 refers can be set individually. If V'max is changed (e.g. to 70% V'nom), the U5 flow range is also automatically changed to the same value (e.g. 70% V'nom: U5 = 10 V). This adjustment can be reversed by entering a value manually (U5 flow range = 100%: U5 refers to V'nom).

As an alternative, U5 can be used to display the valve opening angle.

1. Standard equal percentage V'max = V'nom / 2. effect V'max < V'nom

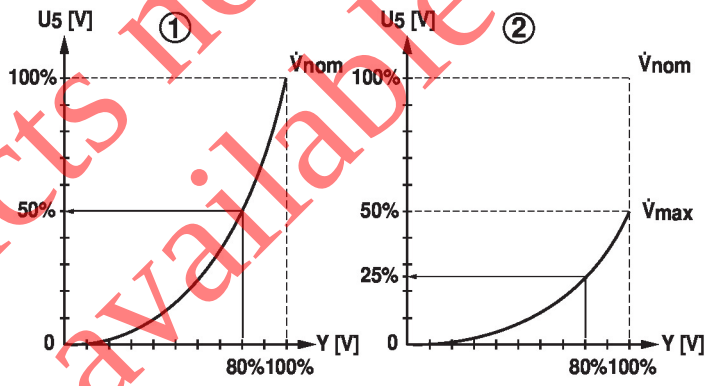

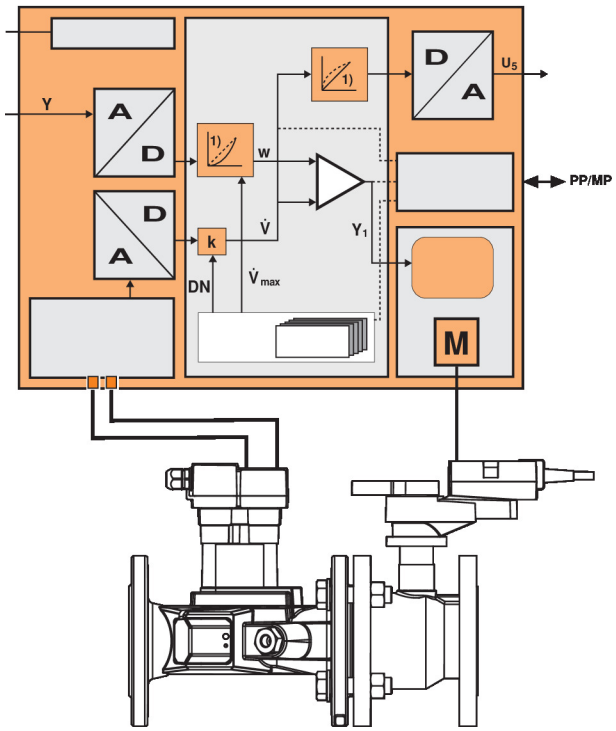

Products no longer available

Product features

Flow control

V'nom is the maximum possible flow.

V'max is the maximum flow rate which has been set with the highest control signal. V'max can be set between 30% and 100% of V'nom.

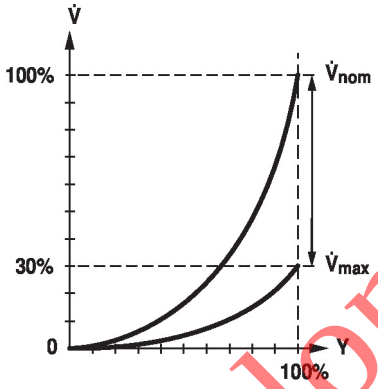

Creep flow suppression

Given the very low flow speed in the opening point, this can no longer be measured by the sensor within the required tolerance. This range is overridden electronically.

Opening valve

The valve remains closed until the flow required by the control signal DDC corresponds to 1% of V'nom. The control along the flow characteristic is active after this value has been exceeded.

Closing valve

The control along the flow characteristic is active up to the required flow rate of 1% of V'nom. Once the level falls below this value, the flow rate is maintained at 1% of V'nom. If the level falls below the flow rate of 0.5% of V'nom required by the control signal DDC, then the valve will close.

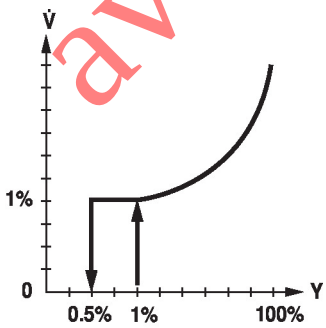

Converter for sensors

Connection option for a sensor (active sensor or switching contact). The MP actuator serves as an analogue/digital converter for the transmission of the sensor signal via MP-Bus to the higher level system.

Configurable device

The factory settings cover the most common applications. Single parameters can be modified with Belimo Assistant 2 or ZTH EU.

Control signal inversion

This can be inverted in cases of control with an analogue control signal. The inversion causes the reversal of the standard behaviour, i.e. at a control signal of 0%, regulation is to V'max, and the valve is closed at a control signal of 100%.

Hydronic balancing

With the Belimo tools, the maximum flow rate (equivalent to 100% requirement) can be adjusted on-site, simply and reliably, in a few steps. If the device is integrated in the management system, then the balancing can be handled directly by the management system.

Manual override

Manual control with push-button possible - temporary. The gear train is disengaged and the actuator decoupled for as long as the button is pressed.

High functional safety

The actuator is overload protected, requires no limit switches and automatically stops when the end stop is reached.

Products no longer available

Accessories

Tools	Description	Type
	Service tool, with ZIP-USB function, for configurable and communicative Belimo actuators, VAV controller and HVAC performance devices	ZTH EU
	Service tool for wired and wireless setup, on-site operation and troubleshooting.	Belimo Assistant 2
	Adapter for Service-Tool ZTH	MFT-C
	Connecting cable 5 m, A: RJ11 6/4 LINK.10, B: 6-pin for connection to service socket	ZK1-GEN
	Connecting cable 5 m, A: RJ11 6/4 LINK.10, B: free wire end for connection to MP/PP terminal	ZK2-GEN
	Belimo Assistant Link Bluetooth and USB to NFC and MP-Bus converter for configurable and communicative devices	LINK.10

Electrical accessories	Description	Type
	Stem heater flange F05 (30 W)	ZR24-F05
	MP-Bus power supply for MP actuators	ZN230-24MP

Gateways	Description	Type
	Gateway MP to BACnet MS/TP	UK24BAC
	Gateway MP to Modbus RTU	UK24MOD

Electrical installation

Supply from isolating transformer.
Parallel connection of other actuators possible. Observe the performance data.

Wire colours:
1 = black
2 = red
3 = white
5 = orange

AC/DC 24 V, modulating

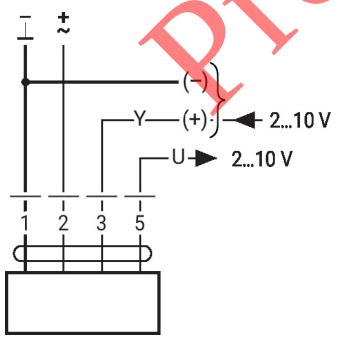

MP-Bus

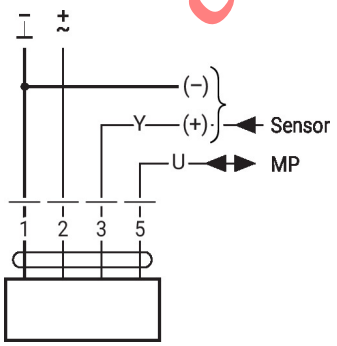

Products no longer available

Electrical installation

Converter for sensors

Connection of external switching contact

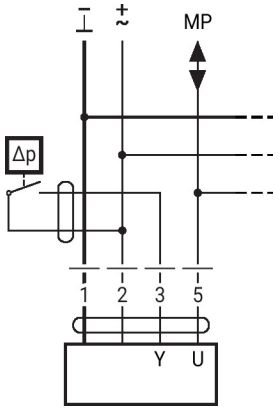

- Switching current 16 mA @ 24 V
- Start point of the operating range must be configured on the MP actuator as ≥0.5 V

Connection of active sensors

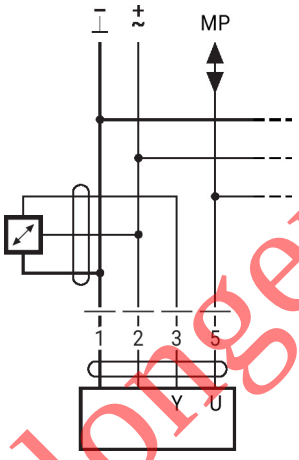

- Supply AC/DC 24 V
- Output signal 0...10 V (max. 0...32 V)
- Resolution 30 mV

Further electrical installations

Functions with specific parameters (configuration necessary)

MP-Bus Network topology

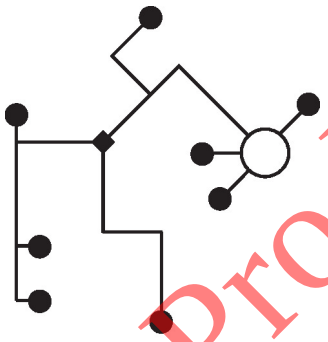

There are no restrictions for the network topology (star, ring, tree or mixed forms are permitted).
Supply and communication in one and the same 3-wire cable
- no shielding or twisting necessary
- no terminating resistors required

Override control and limiting with AC 24 V with relay contacts

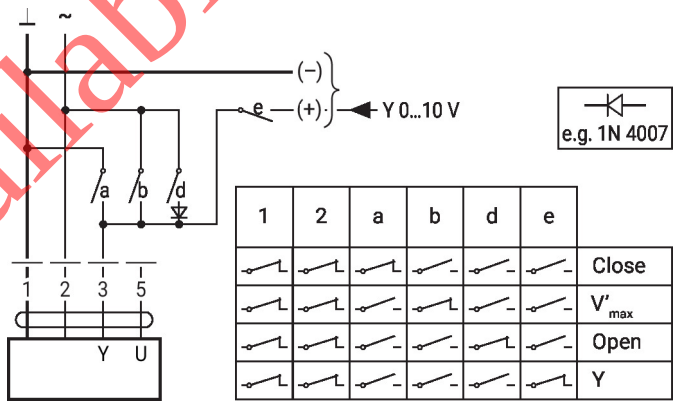

Override control and limiting with DC 24 V with relay contacts

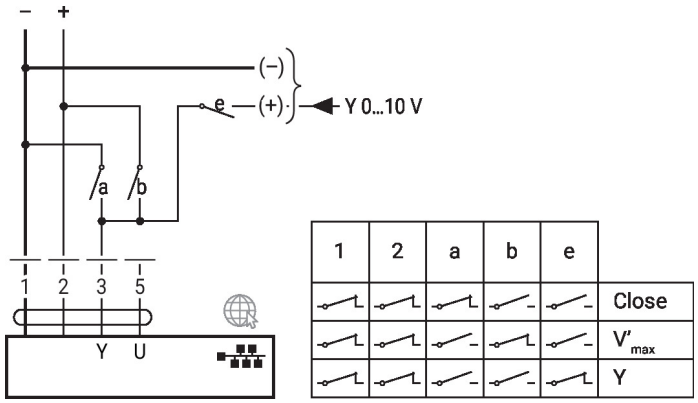

Control 3-point

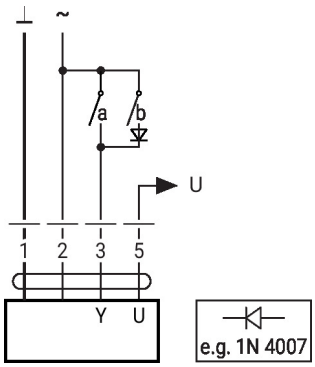

Products no longer available

Operating controls and indicators

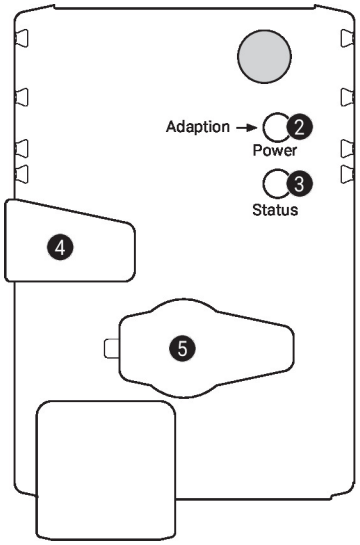

2 Push-button and LED display green

Off:	No power supply or malfunction
On:	In operation
Press button:	Triggers angle-of-rotation adaptation, followed by standard mode

3 Push-button and LED display yellow

Off:	Standard mode
On:	Adaptation or synchronisation process active
Flickering:	MP-Bus communication active
Press button:	Confirmation of the addressing

4 Manual override button

Press button:	Gear train disengages, motor stops, manual override possible
Release button:	Gear train engages, standard mode

5 Service plug
For connecting configuration and service tools

Check power supply connection

2 Off and 3 On — Possible wiring error in power supply

Setting fail-safe position

Setting fail-safe position (POP)

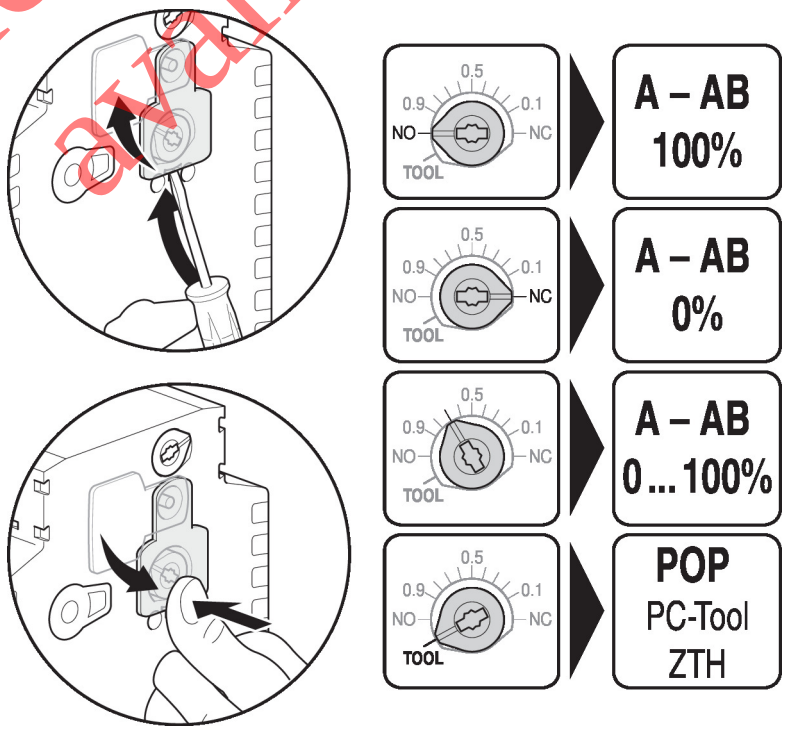

Products no longer available

Installation notes

Permissible installation orientation

The ball valve can be installed upright to horizontal. The ball valve may not be installed in a hanging position, i.e. with the spindle pointing downwards.

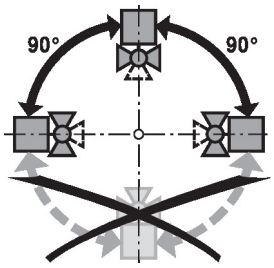

Installation location in return

Installation in the return is recommended.

Water quality requirements

The water quality requirements specified in VDI 2035 must be adhered to.

Belimo valves are regulating devices. For the valves to function correctly in the long term, they must be kept free from particle debris (e.g. welding beads during installation work). The installation of a suitable strainer is recommended.

The water must exhibit a conductivity ≥ 20 µS/cm during operation for correct functioning. It should be noted that, under normal circumstances, even filling water with a lower conductivity will experience an elevation of its conductivity to above the minimum required value during filling and that the system can thus be put into operation.

Elevation of conductivity during filling caused by:

- untreated residual water from pressure test or pre-rinsing
- metal salts (e.g. surface rust) dissolved out of the raw material

Stem heater

In cold water applications and warm humid ambient air, condensation can be caused in the actuators. This can lead to corrosion in the gear train of the actuator and a breakdown of the actuator. In such applications, the use of a stem heater is recommended.

The stem heater must only be activated when the system is in operation because it does not have a temperature controller.

Servicing

Ball valves, rotary actuators and sensors are maintenance-free.

Before any service work on the control element is carried out, it is essential to isolate the rotary actuator from the power supply (by unplugging the electrical cable if necessary). Any pumps in the part of the piping system concerned must also be switched off and the appropriate slide valves closed (allow all components to cool down first if necessary and always reduce the system pressure to ambient pressure level).

The system must not be returned to service until the ball valve and the rotary actuator have been correctly reassembled in accordance with the instructions and the pipeline has been refilled by professionally trained personnel.

Flow direction

The direction of flow, specified by an arrow on the housing, is to be complied with, since otherwise the flow rate will be measured incorrectly.

Products no longer available

Installation notes

Inlet section

A flow calming section or inlet section in the direction of flow must be maintained in front of the flow sensor to achieve the specified measuring accuracy. Its dimensions should be at least 5x DN.

DN	L min.
65	5 x 65 mm = 325 mm
80	5 x 80 mm = 400 mm
100	5 x 100 mm = 500 mm
125	5 x 125 mm = 625 mm
150	5 x 150 mm = 750 mm

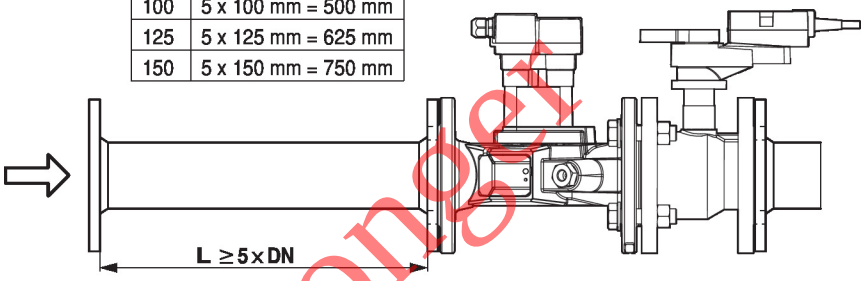

Split installation

The valve-actuator combination may be mounted separately from the flow sensor. The direction of flow of both components must be observed.

General notes

Valve selection

The valve is determined using the maximum required flow rate V'max.

A calculation of the Kvs value is not required.

V'max = 30...100% of V'nom

If no hydronic data is available, the same valve DN can be selected as the heat exchanger nominal diameter.

Minimum differential pressure (pressure drop)

The minimum required differential pressure (pressure drop through the valve) for achieving the desired flow V'max can be calculated with the aid of the theoretical Kvs value (see type overview) and the below-mentioned formula. The calculated value is dependent on the required maximum flow V'max. Higher differential pressures are compensated for automatically by the valve.

Formula

$$\Delta p_{min} = 100 \times \left(\frac{V'_{max}}{K_{vs}\ theor.} \right)^2$$

Δp_{min}: kPa
V'_{max}: m³/h
K_{vs} theor.: m³/h

Example (DN 100 with the desired maximum flow rate = 50% V'nom)

EP100F+KMP
K_{vs} theor. = 127 m³/h
V'_{nom} = 1200 l/min
50% x 1200 l/min = 600 l/min = 36 m³/h

$$\Delta p_{min} = 100 \times \left(\frac{V'_{max}}{K_{vs}\ theor.} \right)^2 = 100 \times \left(\frac{36\ m^3/h}{127\ m^3/h} \right)^2 = 8\ kPa$$

Behaviour in case of sensor failure

In case of a flow sensor error, the EPIV will switch from flow control to position control.

Once the error disappears, the EPIV will switch back to the normal control setting.

Products no longer available

Service

Wired connection

The device can be configured by ZTH EU via the service socket.
For an extended configuration, Belimo Assistant 2 can be connected.

Connection ZTH EU / Belimo Assistant 2

Dimensions

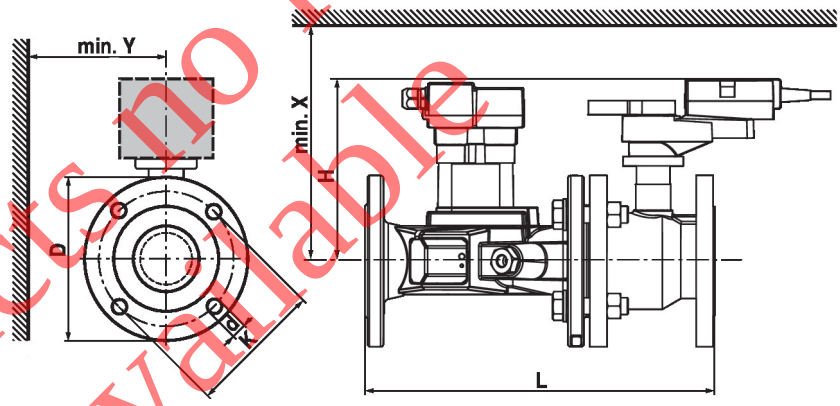

If Y <180 mm, the extension of the hand crank must be demounted as necessary.

Type	DN	L [mm]	H [mm]	D [mm]	d [mm]	K [mm]	X [mm]	Y [mm]	kg
EP065F+KMP	65	379	214	185	4 x 19	145	220	150	26
EP080F+KMP	80	430	214	200	8 x 19	160	220	160	32
EP100F+KMP	100	474	239	229	8 x 19	180	240	175	46
EP125F+KMP	125	579	258	252	8 x 19	210	260	190	55
EP150F+KMP	150	651	258	282	8 x 23	240	260	200	77

Further documentation

- Overview MP Cooperation Partners
- Tool connections
- Introduction to MP-Bus Technology
- General notes for project planning
- Quick Guide – Belimo Assistant 2

Products no longer available