Damper actuator for adjusting dampers in technical building installations

GM230-C2

- Torque motor 40 Nm
- Nominal voltage AC 100...240 V
- Control Open/close, 3-point
- Running time motor 35 s (35...150 s)
- With pluggable connecting cable

Picture may differ from product

Product no longer available

Technical data

Electrical data	Nominal voltage	AC 100...240 V
	Nominal voltage frequency	50/60 Hz
	Nominal voltage range	AC 85...265 V
	Power consumption in operation	5.5 W
	Power consumption in rest position	0.6 W
	Power consumption for wire sizing	13 VA
	Connection supply / control	Cable FRNC (halogen-free) 1 m 3x 0.75 mm² [19 AWG]
	Parallel operation	See Electrical Installation or contact your local Belimo representative
Functional data	Torque motor	40 Nm
	Direction of motion motor	clockwise rotation (cw)
	Direction of motion note	selectable with Belimo Assistant 2
	Manual override	with lateral lever, can be locked
	Angle of rotation	Max. 95°
	Angle of rotation note	can be electronically limited on both sides with Belimo Assistant 2
	Running time motor	35 s / 90°
	Running time motor variable	35...150 s
	Sound power level, motor	60 dB(A)
	Mechanical interface	Universal shaft clamp reversible 12...26.7 mm
	Position indication	Mechanical
Safety data	Protection class IEC/EN	II, reinforced insulation
	Degree of protection IEC/EN	IP54
	EMC	CE according to 2014/30/EU
	Low voltage directive	CE according to 2014/35/EU
	Certification IEC/EN	IEC/EN 60730-1 and IEC/EN 60730-2-14
	Type of action	Type 1
	Rated impulse voltage supply / control	2.5 kV
	Pollution degree	3
	Environmental conditions operation	Class 3K23 according to IEC 60721-3-3
	Ambient humidity	Max. 95% RH, non-condensing
	Ambient temperature	-30...55°C [-22...131°F]
	Ambient temperature note	up to 60°C [140°F], max. 2 h/day
	Environmental conditions transport	Class 2K11 according to IEC 60721-3-2
	Environmental conditions storage	Class 1K21 according to IEC 60721-3-1
	Storage temperature	-30...55°C [-22...131°F]

Technical data

Safety data	Servicing	maintenance-free
Weight	Weight	1.6 kg

Safety notes

- This device has been designed for use in stationary heating, ventilation and air-conditioning systems and must not be used outside the specified field of application, especially in aircraft or in any other airborne means of transport.
- Outdoor application: Only possible if no (sea) water, snow, ice, sunlight or aggressive gases act directly on the device and if it is ensured that the ambient conditions remain within the limit values specified in the data sheet at all times.
- Caution: Mains voltage!
- Only authorised specialists may carry out installation. All applicable legal or institutional installation regulations must be complied with during installation.
- The device may only be opened at the manufacturer's site. It does not contain any parts that can be replaced or repaired by the user.
- To calculate the torque required, the specifications supplied by the damper manufacturers concerning the cross-section and the design, as well as the installation situation and the ventilation conditions must be observed.
- The device contains electrical and electronic components and must not be disposed of as household refuse. All locally valid regulations and requirements must be observed.

Product features

Visual status display The device indicates its operation by means of a green LED.

Configurable device The factory settings cover the most common applications.

Parameters can be modified wireless via NFC (Near Field Communication) using Belimo Assistant 2.

Simple direct mounting Simple direct mounting on the damper shaft with a universal shaft clamp, supplied with an anti-rotation mechanism to prevent the actuator from rotating.

Manual override Manual override possible with lateral lever (the gear train is disengaged for as long as the lever is actuated or remains locked).

Manual override with stationary actuator is used for installation, commissioning and maintenance of the application.

Adjustable angle of rotation Adjustable angle of rotation with electrical end stops. The setting of the control range (Min - Max) is made with Belimo Assistant 2.

High functional reliability The actuator is overload protected, requires no limit switches and automatically stops when the end stop is reached.

Innovative motorisation The actuator uses the powerful Belimo M600 microchip in combination with the INFORM method. It provides the full starting torque from a standstill with high precision (sensorless INFORM-Drive by Prof. Schrödl).

Product no longer available

Product features

Connection The cable can be plugged in and unplugged from the device.

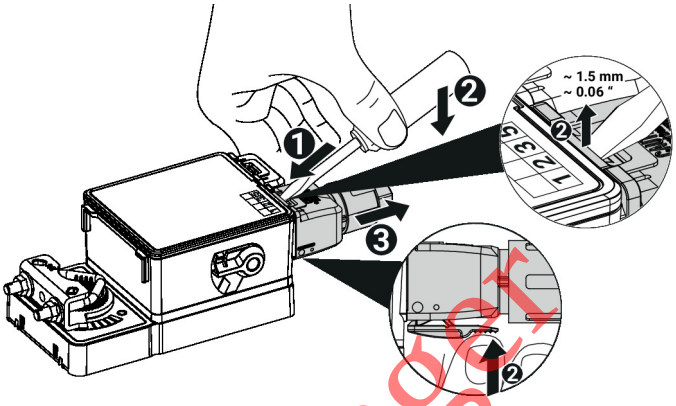

Accessories

Tools	Description	Type
	Service tool for wired and wireless setup, on-site operation and troubleshooting.	Belimo Assistant 2
	Belimo Assistant Link Bluetooth and USB to NFC and MP-Bus converter for configurable and communicative devices	LINK.10

Electrical accessories	Description	Type
	Connecting cable for applications with mains voltage, 1 m FRNC (halogen-free), 3x 0.75 mm²/18 AWG	A.EISC.16
	Connecting terminal compl. IP65 for applications with mains voltage	A.EIST.13
	Cable conduit connector, M20	S.EISCC.11
	Cable conduit connector, 1/2" NPT	S.EISCC.10
	Blanking plug	S.EISBP.10

Mechanical accessories	Description	Type
	Actuator arm for standard shaft clamp	AH-GMA
	Ball joint suitable for damper crank arm KH8 / KH10	KG10A
	Damper crank arm Slot width 8.2 mm, clamping range ø14...25 mm	KH10
	Anti-rotation mechanism 230 mm, Multipack 20 pcs.	Z-ARS230
	Mounting kit for linkage operation for flat installation	ZG-GMA
	Position indicator	S.MISPI.10

Product no longer available

Electrical installation

Caution: Mains voltage!

Actuators may be connected in parallel if not mechanically linked. Power consumption and input impedance must be observed.

The cable cross-section (mm²) must be determined on the basis of the actuator performance data (VA, W), the cable resistance, the number of actuators, and the total cable length according to electrotechnical principles. High voltage drops across the installation cables can affect the function of the actuator if, for example, the nominal voltage range (AC/DC) is not respected.

Wire colours:
1 = blue
2 = brown
3 = white

Electrical installation

AC 100...240 V, open/close

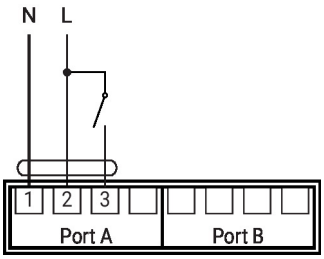

AC 100...240 V, 3-point

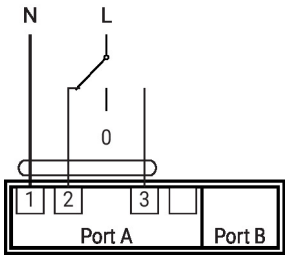

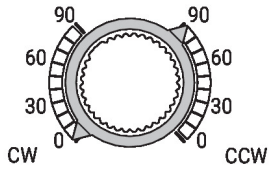

1	2	3	cw	ccw
			0°	90°
			90°	0°
			90°	0°

Operating controls and indicators

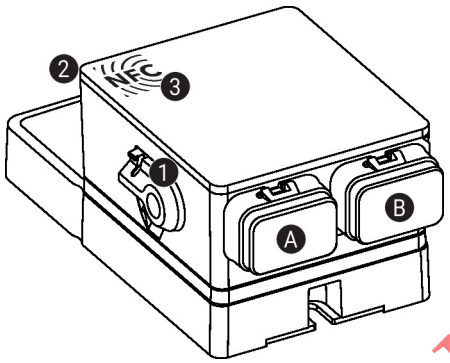

1 **Manual override lever**
Rotate lever counterclockwise to end position:
- Gear train disengages, manual override possible

Return lever clockwise to starting position:
- Gear train engages, followed by standard mode

2 **Status display, LED green**

LED on:	operation OK
LED flashing:	Connect device with Belimo Assistant 2 for additional information
LED off:	No power supply

3 **NFC interface**

A **Port A**, see Electrical Installation

B **Port B**, see Electrical Installation

Product no longer available

Service

Using Belimo Assistant 2, device parameters can be modified. Belimo Assistant 2 can operate on a smartphone, tablet or PC. The available connection options vary depending on the hardware on which Belimo Assistant 2 is installed.

For more information about Belimo Assistant 2, refer to the Quick Guide – Belimo Assistant 2.

Service

Wireless connection

Belimo devices marked with the NFC logo can be accessed either directly with an NFC-capable smartphone or with a Bluetooth-capable smartphone connected to Belimo Assistant Link or ZIP-BT-NFC.

Align the NFC-capable smartphone or Belimo Assistant Link with the device's NFC logo so that both NFC antennas are superposed.

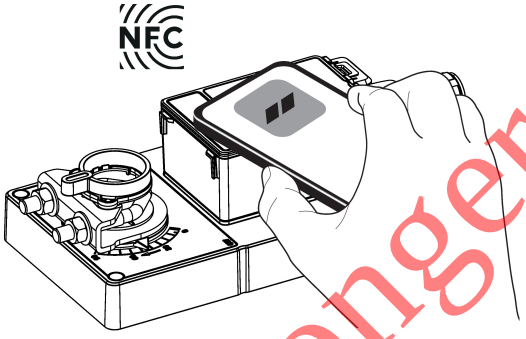

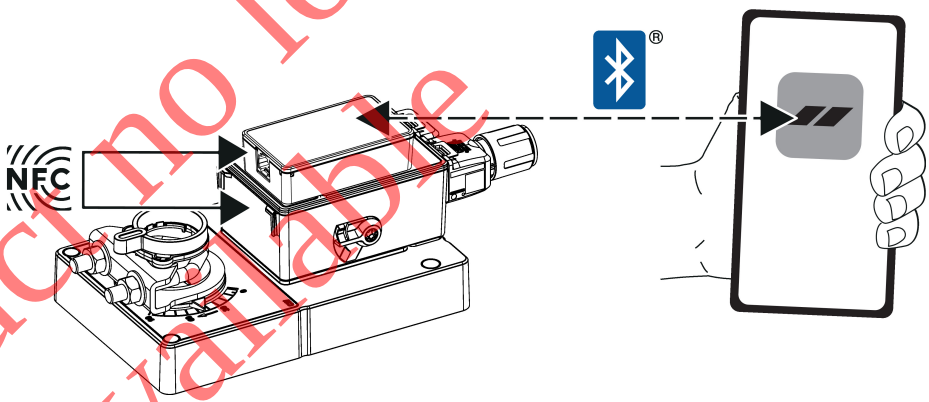

Product no longer available

Dimensions

Shaft length

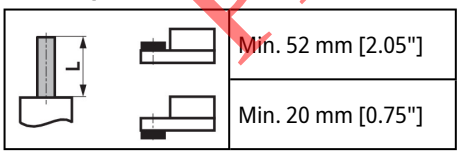

Clamping range

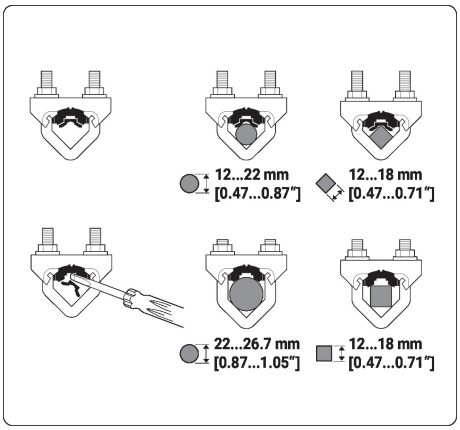

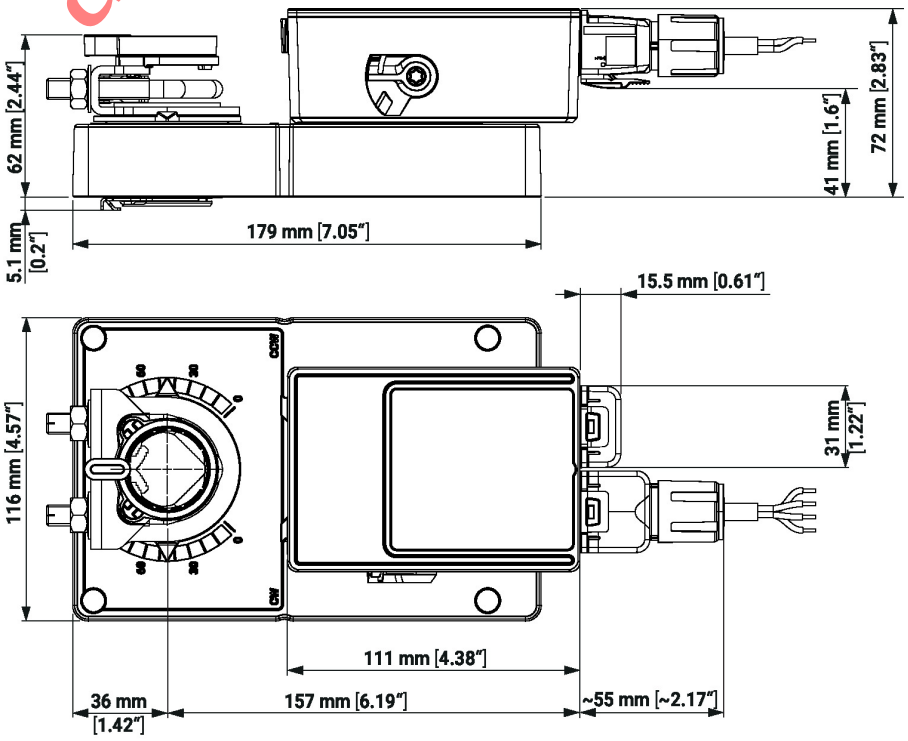

Further documentation

- Quick Guide – Belimo Assistant 2