Outdoor sensor with weather shield Humidity / Temperature

Active sensor (0...10 V) for measuring the relative or absolute humidity and temperature in outdoor areas. Instead of the humidity signal, the enthalpy or the dewpoint can be selected as an output signal. IP65 / NEMA 4X rated housing.

5 YEAR WARRANTY

Type Overview

Type	Output signal active temperature	Output signal active humidity
22UTH-11	0...5 V, 0...10 V	0...5 V, 0...10 V

Technical data

Electrical data	Nominal voltage	AC/DC 24 V
	Nominal voltage range	AC 21.6...26.4 V / DC 13.5...26.4 V
	Power consumption AC	0.8 VA
	Power consumption DC	0.4 W
	Electrical connection	Pluggable spring loaded terminal block max. 2.5 mm²
	Cable entry	Cable gland with strain relief ø6...8 mm
Functional data	Medium	Air
	Multirange	4 measuring ranges selectable
	Voltage output	2 x 0...5 V, 0...10 V, min. resistance 10 kΩ
	Output signal active note	Output 0...5/10 V with Jumper adjustable
Measuring data	Measured values	Relative humidity Absolute humidity Dew point Enthalpies Temperature
Specification temperature active	Sensing element technology	Polymer-based capacitive sensor with stainless steel wire mesh filter
	Measuring range temperature settings	Active sensor: range selectable Attention: The maximum measuring range listed does not indicate the allowable fluid temperature for the sensor. Refer to safety data for the maximum fluid temperature limits. Setting / Range [°C] / Range [°F] / Factory setting S0 / -40...60 / -40...160 S1 / 0...50 / 40...140 S2 / -15...35 / 0...100 S3 / -20...80 / 0...200 ✓
	Accuracy temperature	±0.3°C @ 25°C [±0.5°F @ 77°F]
	Long term stability	±0.05°C p.a. @ 21°C [±0.09°F p.a. @ 70°F]
	Time constant τ (63%) in the room	Typical 351 s @ 0 m/s

Technical data

Specification Humidity	Sensing element technology	Polymer-based capacitive sensor with stainless steel wire mesh filter
	Measuring range	0...100% RH non-condensing
	Measuring range absolute humidity	adjustable at the transducer: 0...50 g/m³ (default setting) 0...80 g/m³
	Measuring range enthalpy	0...85 kJ/kg
	Measuring range dew point	adjustable at the transducer: 0...50°C [40...140°F] (default setting) -20...80°C [0...200°F]
	Accuracy	±2% between 0...80% RH @ 25°C
	Long term stability	±0.3% RH p.a. @ 21°C @ 50% RH
	Time constant τ (63%) in the room	Typical 16 s @ 0 m/s
Safety data	Protection class IEC/EN	III, Safety Extra-Low Voltage (SELV)
	Power source UL	Class 2 Supply
	Degree of protection IEC/EN	IP65
	Degree of protection NEMA/UL	NEMA 4X
	Housing	UL Enclosure Type 4X
	EU Conformity	CE Marking
	Certification IEC/EN	IEC/EN 60730-1
	Quality Standard	ISO 9001
	Type of action	Type 1
	Rated impulse voltage supply	0.8 kV
	Pollution degree	3
	Ambient humidity	Short-term condensation permitted
	Ambient temperature	-35...50°C [-30...120°F]
	Fluid humidity	Short-term condensation permitted
	Fluid temperature	-35...50°C [-30...122°F]
Materials	Housing	Cover: PC, white Bottom: PC, white Seal: NBR70, black UV resistant
	Cable gland	PA6, white

Safety notes

This device has been designed for use in stationary heating, ventilation and air-conditioning systems and must not be used outside the specified field of application. Unauthorised modifications are prohibited. The product must not be used in relation with any equipment that in case of a failure may threaten humans, animals or assets.

Ensure all power is disconnected before installing. Do not connect to live/operating equipment.

Only authorised specialists may carry out installation. All applicable legal or institutional installation regulations must be complied with during installation.

The device contains electrical and electronic components and must not be disposed of as household refuse. All locally valid regulations and requirements must be observed.

Remarks

General remarks concerning sensors

When using lengthy connection wires (depending on the cross section used) the measuring result might be falsified due to a voltage drop at the common GND-wire (caused by the voltage current and the line resistance). In this case, 2 GND-wires must be wired to the sensor - one for supply voltage and one for the measuring current.

Sensing devices with a transducer should always be operated in the middle of the measuring range to avoid deviations at the measuring end points. The ambient temperature of transducer electronics should be kept constant. The transducers must be operated at a constant supply voltage (±0.2 V). When switching the supply voltage on/off, onsite power surges must be avoided.

Remark: Occurring draft leads to a better carrying-off of dissipative power at the sensor. Thus temporally limited fluctuations might occur upon temperature measurement.

Build-up of self-heating by electrical dissipative power

Temperature sensors with electronic components always have a dissipative power which affects the temperature measurement of the ambient air. The dissipation in active temperature sensors shows a linear increase with rising operating voltage. The dissipative power should be taken into account when measuring temperature.

In case of a fixed operating voltage (±0.2 V), this is normally done by adding or reducing a constant offset value. As Belimo transducers work with a variable operating voltage, for reasons of production engineering only one operating voltage can be taken into consideration. Transducers 0...10 V / 4...20 mA have a standard setting at an operating voltage of DC 24 V. This means that at this voltage, the expected measuring error of the output signal will be the least. For other operating voltages, the offset error will be increased by a changing power loss of the sensor electronics.

If a readjustment directly at the active sensor should be necessary during later operation, this can be done with the following adjustment methods.

- For sensors with NFC or dongle with the corresponding Belimo app
- For sensors with a trimming potentiometer on the sensor board
- For bus sensors via bus interface with a corresponding software variable

Application notice for humidity sensors

The humidity sensor is extremely sensitive. Touching the sensor element or exposing it to aggressive substances like chlorine, ozone, ammonia, hydrogen peroxide or ethanol (i.e. as a cleaning agent) may affect the measurement accuracy.

Long term operation outside the recommended conditions (5...60°C and 20...80% RH) can result in a temporary offset. After returning into the recommended range, this effect disappears.

Parts included

Description	Type
Mounting plate L housing	A-22D-A10
Rain cover, for 22UTH-..	A-22U-A01
Dowels	
Screws	

Accessories

Optional accessories

Description	Type
Replacement filter sensor probe tip, wire mesh, Stainless steel	A-22D-A06

Wiring diagram

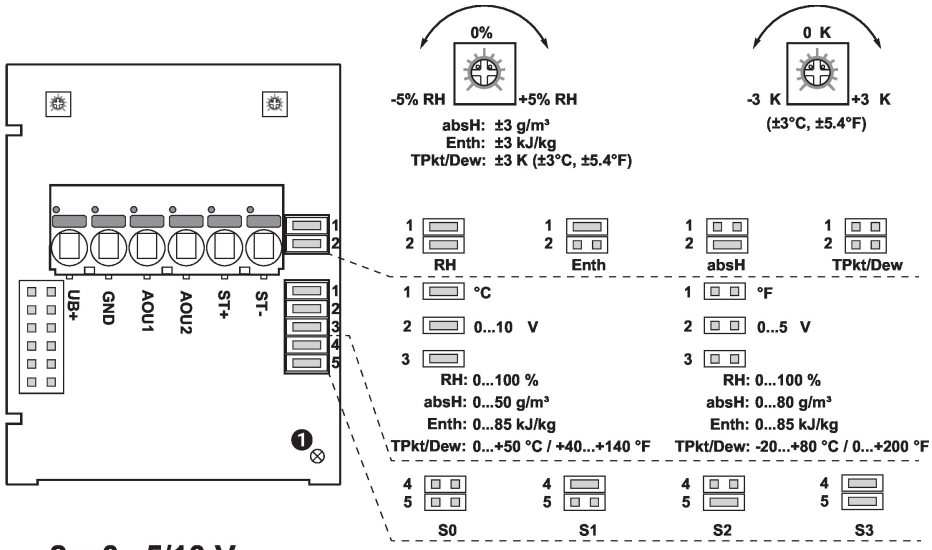

2 x 0...5/10 V

① Status LED
Slow blinking (0.5 Hz): Ok
Fast blinking (4 Hz): Failure

RH	Relative humidity
absH	Absolute humidity
EntH	Enthalpy
TPkt/Dew	Dew point

(Measured value available on output AOU1)

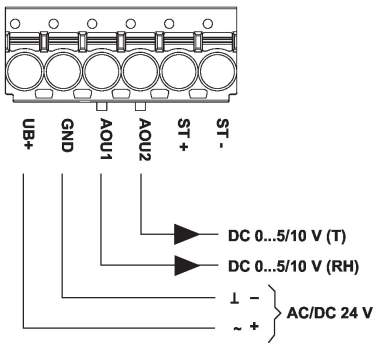

The following measuring ranges can be adjusted through the jumper settings:

Setting	Range [°C]	Range [°F]	Factory setting
S0	-40...60	-40...160	
S1	0...50	40...140	
S2	-15...35	0...100	
S3	-20...80	0...200	✔

Dimensions

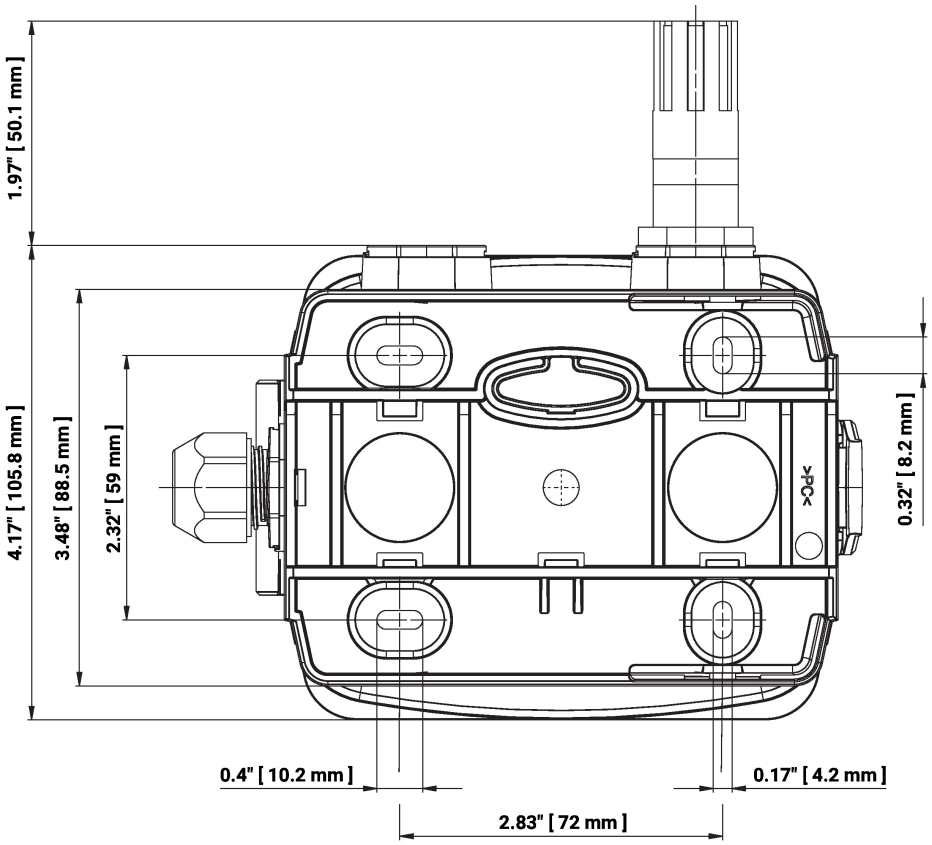

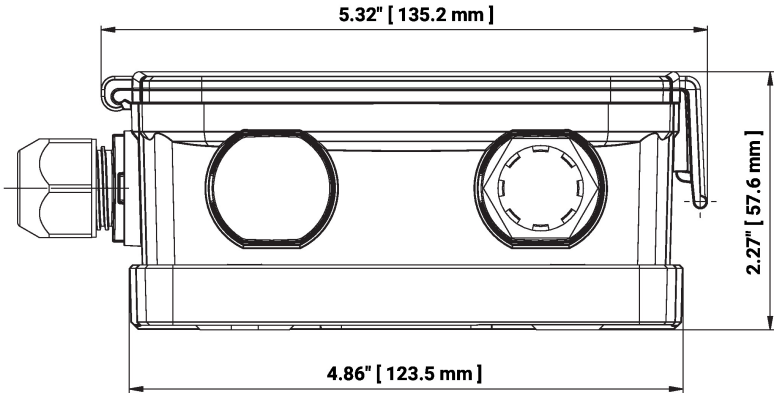

Type	Weight
22UTH-11	0.28 kg

Further documentation

- Installation instructions