Changeover zone valve, 3-way, External thread

- For closed water systems
- For switching functions and open/close controls on the water side of air handling systems and heating systems
- Snap-assembly of the actuator

Picture may differ from product

Type overview

Type	DN	G ["]	Kvs [m³/h]	PN
C515Q-H	15	3/4	2.3	25
C520Q-J	20	3/4	3.6	25

Technical data

Functional data	Fluid	Water, water with glycol up to max. 50% vol.
	Fluid temperature	2...100°C [36...212°F]
	Fluid temperature note	with actuator 2...90°C
	Close-off pressure Δps	280 kPa
	Differential pressure Δpmax	280 kPa
	Differential pressure note	50 kPa for low-noise operation
	Leakage rate	air-bubble tight, leakage rate A (EN 12266-1)
	Angle of rotation	90°
	Pipe connection	External thread according to ISO 228-1
	Installation orientation	upright to horizontal (in relation to the spindle)
	Servicing	maintenance-free
Materials	Valve body	Brass
	Closing element	chrome-plated brass
	Spindle	Brass
	Spindle seal	EPDM O-ring
	Seat	PTFE, O-ring EPDM

Safety notes

- The valve has been designed for use in stationary heating, ventilation and air-conditioning systems and must not be used outside the specified field of application, especially in aircraft or in any other airborne means of transport.
- Only authorised specialists may carry out installation. All applicable legal or institutional installation regulations must be complied with during installation.
- The valve does not contain any parts that can be replaced or repaired by the user.
- The valve may not be disposed of as household refuse. All locally valid regulations and requirements must be observed.
- When determining the flow rate characteristic of controlled devices, the recognised directives must be observed.

Product features

Operating mode

The change-over zone valve is adjusted by a rotary actuator. The rotary actuator is controlled by an open/close signal.

Simple direct mounting

Tool-free snap assembly.

The actuator can be plugged on the valve by hand (Caution! Just vertical movements). Pins must match the holes on the flange.

The mounting orientation in relation to the valve can be selected in 180° increments. (Possible two times)

Accessories

Mechanical accessories

Description	Type
Spindle extension CQ	ZCQ-E
Pipe connector for ball valve with external thread DN 15 Rp 1/2"	ZR4515Q
Pipe connector for ball valve with external thread DN 20 Rp 3/4"	ZR4520Q

Installation notes

Permissible installation orientation

The ball valve can be installed upright to horizontal. The ball valve may not be installed in a hanging position, i.e. with the spindle pointing downwards.

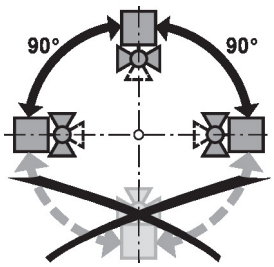

Water quality requirements

The water quality requirements specified in VDI 2035 must be adhered to.

Belimo valves are regulating devices. For the valves to function correctly in the long term, they must be kept free from particle debris (e.g. welding beads during installation work). The installation of a suitable strainer is recommended.

Servicing

Ball valves and rotary actuators are maintenance-free.

Before any service work on the control element is carried out, it is essential to isolate the rotary actuator from the power supply (by unplugging the electrical cable if necessary). Any pumps in the part of the piping system concerned must also be switched off and the appropriate slide valves closed (allow all components to cool down first if necessary and always reduce the system pressure to ambient pressure level).

The system must not be returned to service until the ball valve and the rotary actuator have been correctly reassembled in accordance with the instructions and the pipeline has been refilled by professionally trained personnel.

Installation notes

Flow direction Direction of flow in both directions possible.

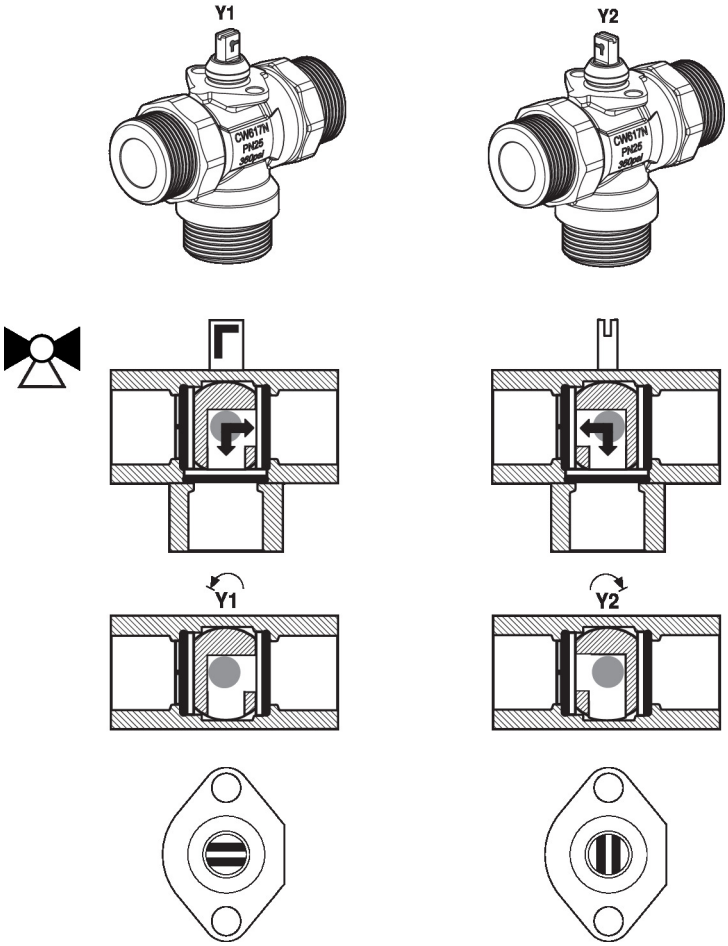

Flow setting At the actuator the end stop clip has to be removed in order to get the angle of rotation of 90°, which is needed for the change-over functionality.

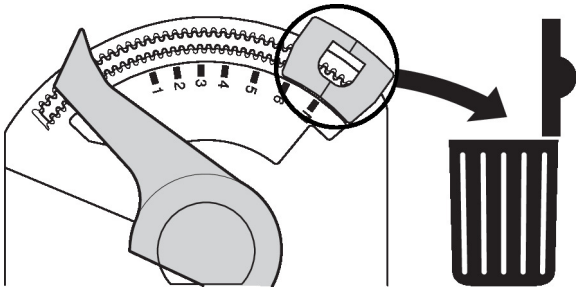

Remove end stop clip

Dimensions

Dimensional drawings

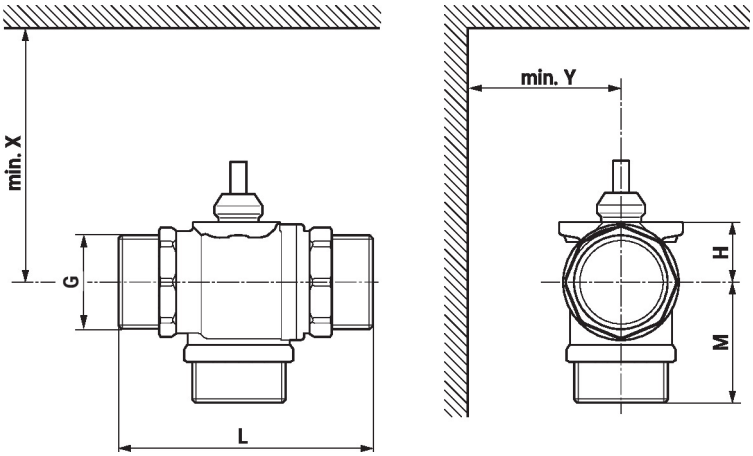

X/Y: Minimum distance with respect to the valve centre.
The actuator dimensions can be found on the respective actuator data sheet.

Type	DN	G [“]	L [mm]	M [mm]	H [mm]	X [mm]	Y [mm]	kg
C515Q-H	15	3/4	70	35	14.5	110	35	0.28
C520Q-J	20	3/4	76	38	16.5	110	35	0.36

Further documentation

- The complete product range for water applications
- Data sheets for actuators CQ..
- Installation instructions for zone valves and actuators
- General notes for project planning