Butterfly valve with Lug types

- For open and closed water systems
- For switching heat generators or cooling machines on/off

Picture may differ from product

Type overview

Type	DN	Kvmax [m³/h]	Kvs [m³/h]	PN	n(gl)
D625NL	25	50	24	10 / 16	3.2
D632NL	32	55	25	10 / 16	3.2
D640NL	40	65	27	10 / 16	3.2
D650NL	50	100	30	10 / 16	3.2
D665NL	65	170	50	10 / 16	3.2
D680NL	80	260	75	10 / 16	3.2
D6350NL	350	10300	3010	16	3.2
D6400NL	400	14200	4140	16	3.2
D6450NL	450	18800	5490	16	3.2
D6500NL	500	24100	7060	16	3.2
D6600NL	600	37300	10900	16	3.2
D6700NL	700	42800	11760	16	3.2

The types D6200NL, D6250NL and D6300NL have been replaced by the types D6200WL, D6250WL and D6300WL. For technical data please check the datasheet D6..WL.

Technical data

Functional data	Fluid	Water, water with glycol up to max. 50% vol.
	Fluid temperature	-20...120°C [-4...248°F]
	Differential pressure Δpmax	300 kPa (DN 25, 32, 40, 50, 65, 80, 350, 400, 450, 500, 600) 200 kPa (DN 700)
	Flow characteristic	0...60% opening angle: equal percentage (VDI/VDE 2173) 0...100% opening angle: S-form
	Leakage rate	tight, leakage rate A (EN 12266-1)
	Angle of rotation	90°
	Pipe connection	Flange according to ISO 7005-2 according to EN 1092-2
	Installation orientation	upright to horizontal (in relation to the spindle)
	Servicing	maintenance-free
Materials	Valve body	EN-GJS-400-18-LT (GGG 40.3)
	Body finish	polyester powder coated
	Closing element	Stainless steel AISI 304 (1.4301)
	Spindle	Stainless steel AISI 420 (1.4021) (DN 25, 32, 40, 50, 65, 80) Stainless steel AISI 630 (1.4542) (DN 350, 400, 450, 500, 600, 700)
	Spindle seal	EPDM O-ring

Technical data

Materials

Spindle bearing	RPTFE
Seat	EPDM

Safety notes

- The valve has been designed for use in stationary heating, ventilation and air-conditioning systems and must not be used outside the specified field of application, especially in aircraft or in any other airborne means of transport.
- Only authorised specialists may carry out installation. All applicable legal or institutional installation regulations must be complied with during installation.
- The valve does not contain any parts that can be replaced or repaired by the user.
- The valve may not be disposed of as household refuse. All locally valid regulations and requirements must be observed.
- When determining the flow rate characteristic of controlled devices, the recognised directives must be observed.
- The butterfly valve must be opened and closed slowly in order to avoid hydronic shocks in the pipe system.

Product features

Operating mode

The butterfly valve is opened or closed completely by an open/close rotary actuator. Continuous rotary actuators are connected by a commercially available controller and move the valve to any position desired. The valve disk is pressed into the soft-sealing EPDM seat by a rotary movement and ensures leakage rate A (tight). The pressure losses are slight in the open position and the Kv value is at a maximum.

Manual override

Manual throttling or isolation can be carried out with a lever or a worm gear (see «Accessories»).

-With lever (DN 25...150): Adjustable in 10 ratchet steps with position indication (0 = 0° (angle); 9 = 90° (angle))

-With worm gear (DN 25...700): steplessly adjustable (self-locking) with position indication.

Accessories

Electrical accessories

Description	Type
Stem heater flange F05 (30 W)	ZR24-F05

Mechanical accessories

Description	Type
Worm gear for butterfly valves DN 25...100	ZD6N-S100
Lever for butterfly valves DN 25...100	ZD6N-H100
Worm gear for butterfly valves DN 350	ZD6N-S350
Worm gear for butterfly valves DN 400	ZD6N-S400
Worm gear for butterfly valves DN 450	ZD6N-S450
Worm gear for butterfly valves DN 500	ZD6N-S500
Worm gear for butterfly valves DN 600	ZD6N-S600
Worm gear for butterfly valves DN 700	ZD6N-S700

Installation notes

Permissible installation orientation

The butterfly valves may be mounted upright to horizontal. The butterfly valves may not be installed in a hanging position i.e. with the spindle pointing downwards.

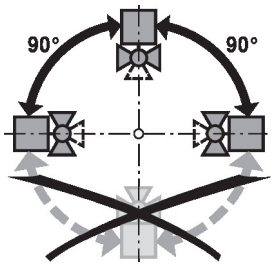

Installation notes

Water quality requirements

The water quality requirements specified in VDI 2035 must be adhered to.

Stem heater

In cold water applications and warm humid ambient air, condensation can be caused in the actuators. This can lead to corrosion in the gear train of the actuator and a breakdown of the actuator. In such applications, the use of a stem heater is recommended.

The stem heater must only be activated when the system is in operation because it does not have a temperature controller.

Servicing

Butterfly valves and rotary actuators are maintenance-free.

Before any service work on the control element is carried out, it is essential to isolate the rotary actuator from the power supply (by unplugging the electrical cable if necessary). Any pumps in the part of the piping system concerned must also be switched off and the appropriate slide valves closed (allow all components to cool down first if necessary and always reduce the system pressure to ambient pressure level).

The system must not be returned to service until the butterfly valve and the rotary actuator have been reassembled correctly in accordance with the instructions and the pipeline has been refilled by professionally trained personnel.

To avoid a torque increase during off season shut down, exercise the butterfly valve (full open and close) at least once a month.

Flow setting

The Belimo butterfly valves have an approximate equal percentage characteristic curve between 0...60% opening angle.

The following table shows the respective Kv values in relation to the opening angle (%).

		10%	20%	30%	40%	50%	60%	70%	80%	90%	100%
DN 25	Kv (m3/h)	0.1	2	6	10	15	24	36	46	48	50
DN 32	Kv (m3/h)	0.1	2	6	11	15	25	38	49	51	55
DN 40	Kv (m3/h)	0.1	2	6	11	16	27	41	59	62	65
DN 50	Kv (m3/h)	0.1	2	6	11	18	30	45	67	90	100
DN 65	Kv (m3/h)	0.1	4	9	17	30	50	76	110	160	170
DN 80	Kv (m3/h)	0.2	6	13	26	50	75	120	170	240	260
DN 100	Kv (m3/h)	0.2	12	26	50	90	150	230	350	480	520
DN 125	Kv (m3/h)	0.4	20	40	90	160	260	400	590	810	880
DN 150	Kv (m3/h)	1	30	70	140	250	400	620	910	1260	1400
DN 350	Kv (m3/h)	5	240	520	1050	1860	3010	4640	6880	9470	10300
DN 400	Kv (m3/h)	6	320	720	1450	2560	4140	6380	9460	13030	14200
DN 450	Kv (m3/h)	9	430	950	1920	3400	5490	8460	12530	17250	18800
DN 500	Kv (m3/h)	11	550	1220	2460	4370	7060	10870	16110	22190	24100
DN 600	Kv (m3/h)	17	850	1880	3800	6740	10900	16800	24890	34280	37300
DN 700	Kv (m3/h)	28	1260	2670	4700	7400	11760	17960	27340	37910	42800

Configuration linear characteristic curve

The flow characteristic can be set to linear using Belimo Assistant 2.

The following table shows the respective Kv values in relation to the control signal (%).

		10%	20%	30%	40%	50%	60%	70%	80%	90%	100%
DN 100	Kv (m3/h)	52	104	156	208	260	312	364	416	468	520
DN 125	Kv (m3/h)	88	176	264	352	440	528	616	704	792	880
DN 150	Kv (m3/h)	140	280	420	560	700	840	980	1120	1260	1400

Differential and close-off pressure

The maximum differential and close-off pressure of butterfly valves depends on diameter and type of the mounted actuator.

To ensure optimum operation and maximum service life, the maximum differential and close-off pressure must not be exceeded.

Please refer to the corresponding table of values in the notes for project planning.

Dimensions

Dimensional drawings

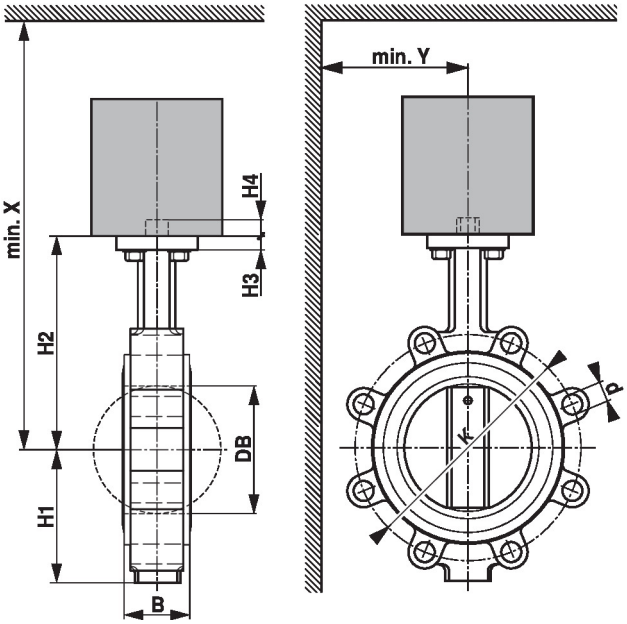

Dimensions

Type	DN	B [mm]	DB [mm]	H1 [mm]	H2 [mm]	H3 [mm]	H4 [mm]	d (PN10)	K (PN10) [mm]
D625NL	25	32	30	53	90	10	13	4 x M12	85
D632NL	32	33	35	60	100	10	13	4 x M16	100
D640NL	40	33	42	68	119	10	13	4 x M16	110
D650NL	50	43	52	72	133	11	13	4 x M16	125
D665NL	65	46	64	81	147	11	13	4 x M16	145
D680NL	80	46	78	96	158	11	13	8 x M16	160
D6100NL	100	52	103	106	170	11	13	8 x M16	180
D6125NL	125	56	122	122	194	15	19	8 x M16	210
D6150NL	150	56	155	140	202	15	19	8 x M20	240
D6350NL	350	78	333	266	361	15	24		
D6400NL	400	102	391	315	402	20	48		
D6450NL	450	114	442	328	420	20	48		
D6500NL	500	127	493	358	474	22	48		
D6600NL	600	154	594	454	559	22	48		
D6700NL	700	165	695	532	622	33	66		

Type	d (PN16)	K (PN16) [mm]	X [mm]	Y [mm]	kg
D625NL	4 x M12	85	320	150	1.3
D632NL	4 x M16	100	340	150	1.6
D640NL	4 x M16	110	350	160	1.7
D650NL	4 x M16	125	370	160	2.5
D665NL	4 x M16	145	380	170	3.1
D680NL	8 x M16	160	390	180	4.4
D6100NL	8 x M16	180	410	190	5.1
D6125NL	8 x M16	210	530	210	7.7
D6150NL	8 x M20	240	540	220	8.9
D6350NL	16 x M24	470	1200	400	45
D6400NL	16 x M27	525	1300	500	92
D6450NL	20 x M27	585	1300	500	110
D6500NL	20 x M30	650	1700	600	150
D6600NL	20 x M33	770	1800	700	240
D6700NL	24 x M33	840	1800	800	320

Further documentation

- The complete product range for water applications
- Data sheets for actuators
- Installation instructions for actuators and/or butterfly valves
- General notes for project planning