Rotary actuator fail-safe for adjusting dampers in technical building installations

- Air damper size up to approx. 0.8 m²
- Torque motor 4 Nm
- Nominal voltage AC 100...240 V
- Control Open/close

Picture may differ from product

Technical data

Electrical data	Nominal voltage	AC 100...240 V
	Nominal voltage frequency	50/60 Hz
	Nominal voltage range	AC 85...265 V
	Power consumption in operation	3.5 W
	Power consumption in rest position	2 W
	Power consumption for wire sizing	6.5 VA
	Inrush current (Imax)	150 mA @ 10 ms
	Connection supply / control	Cable 1 m, 2x 0.75 mm²
	Parallel operation	Yes (note the performance data)
Functional data	Torque motor	4 Nm
	Torque fail-safe	4 Nm
	Direction of motion motor	selectable by mounting L/R
	Direction of motion fail-safe	selectable by mounting L/R
	Manual override	No
	Angle of rotation	Max. 95°
	Angle of rotation note	Adjustable 37...100% with integrated mechanical limitation
	Running time motor	75 s / 90°
	Running time fail-safe	<20 s @ -20...50°C, <60 s @ -30°C
	Sound power level, motor	50 dB(A)
	Mechanical interface	Universal shaft clamp 8...16 mm
	Position indication	Mechanical
	Service life	Min. 60'000 fail-safe positions
Safety data	Protection class IEC/EN	II, reinforced insulation
	Degree of protection IEC/EN	IP54
	EMC	CE according to 2014/30/EU
	Low voltage directive	CE according to 2014/35/EU
	Certification IEC/EN	IEC/EN 60730-1 and IEC/EN 60730-2-14
	Hygiene test	According to VDI 6022 Part 1
	Type of action	Type 1.B
	Rated impulse voltage supply / control	4 kV
	Pollution degree	3
	Ambient humidity	Max. 95% RH, non-condensing
	Ambient temperature	-30...50°C [-22...122°F]
	Storage temperature	-40...80°C [-40...176°F]
	Servicing	maintenance-free
Weight	Weight	1.6 kg

Safety notes

- This device has been designed for use in stationary heating, ventilation and air-conditioning systems and must not be used outside the specified field of application, especially in aircraft or in any other airborne means of transport.
- Outdoor application: Only possible if no (sea) water, snow, ice, sunlight or aggressive gases act directly on the device and if it is ensured that the ambient conditions remain within the limit values specified in the data sheet at all times.
- Caution: Mains voltage!
- Only authorised specialists may carry out installation. All applicable legal or institutional installation regulations must be complied with during installation.
- The device may only be opened at the manufacturer's site. It does not contain any parts that can be replaced or repaired by the user.
- Cables must not be removed from the device.
- To calculate the torque required, the specifications supplied by the damper manufacturers concerning the cross-section and the design, as well as the installation situation and the ventilation conditions must be observed.
- The device contains electrical and electronic components and must not be disposed of as household refuse. All locally valid regulations and requirements must be observed.

Product features

Operating mode
The actuator moves the damper to the operating position at the same time as tensioning the return spring. The damper is turned back to the safety position by spring energy when the supply voltage is interrupted.

Simple direct mounting
Simple direct mounting on the damper shaft with a universal shaft clamp, supplied with an anti-rotation mechanism to prevent the actuator from rotating.

Adjustable angle of rotation
Adjustable angle of rotation with mechanical end stops.

High functional reliability
The actuator is overload protected, requires no limit switches and automatically stops when the end stop is reached.

Accessories

Electrical accessories

Description	Type
Auxiliary switch 2x SPDT	S2A-F
Feedback potentiometer 1 kΩ	P1000A-F

Mechanical accessories

Description	Type
Shaft extension 170 mm ø10 mm for damper shaft ø6...16 mm	AV6-20
Shaft clamp reversible, clamping range ø16...20 mm	K6-1
Ball joint suitable for damper crank arm KH8 / KH10	KG10A
Ball joint suitable for damper crank arm KH8	KG8
Damper crank arm Slot width 8.2 mm, clamping range ø10...18 mm	KH8
Actuator arm, clamping range ø8...16 mm, Slot width 8.2 mm	KH-LF
Angle of rotation limiter, with end stop	ZDB-LF
Form fit adapter 8x8 mm	ZF8-LF
Mounting kit for linkage operation for flat installation	ZG-LF1
Mounting kit for linkage operation for side installation Slot width 6.2 mm	ZG-LF3
Anti-rotation mechanism 180 mm, Multipack 20 pcs.	Z-ARS180L

Electrical installation

Caution: Mains voltage!

Parallel connection of other actuators possible. Observe the performance data.

The cable cross-section (mm²) must be determined on the basis of the actuator performance data (VA, W), the cable resistance, the number of actuators, and the total cable length according to electrotechnical principles. High voltage drops across the installation cables can affect the function of the actuator if, for example, the nominal voltage range (AC/DC) is not respected.

Electrical installation

Wire colours:
1 = blue
2 = brown

AC 230 V, open/close

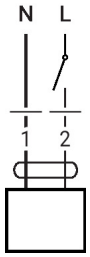

Dimensions

Shaft length

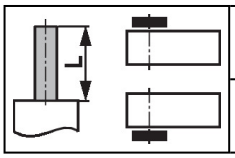	Min. 84
	Min. 20 mm [0.75"]

Clamping range
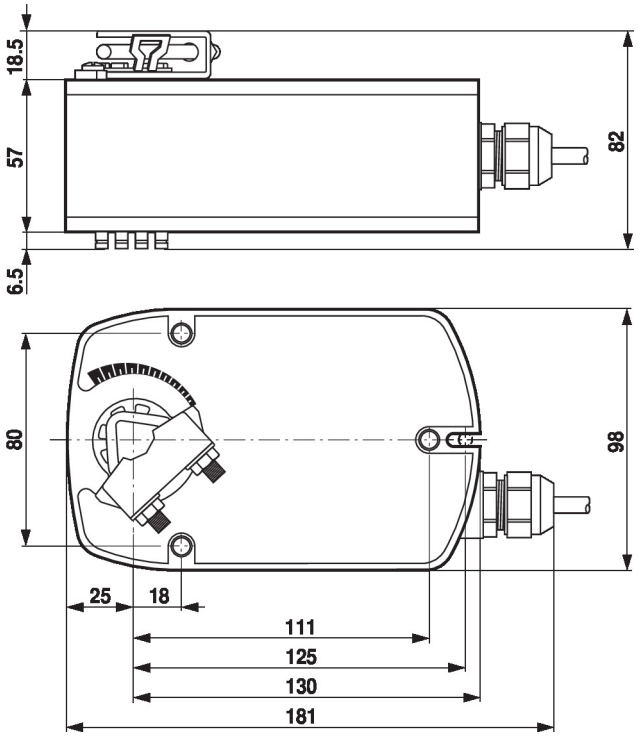
8...16	8...16