Converter for the connection of Belimo Assistant 2 and configurable and communicative devices from Belimo

- Supports Bluetooth and USB to NFC and MP-Bus
- Configuration of powered and unpowered devices

Picture may differ from product

Technical data

Electrical data	Nominal voltage	AC/DC 24 V
	Nominal voltage frequency	50/60 Hz
	Nominal voltage range	AC 19.2...28.8 V / DC 21.6...28.8 V
	Power consumption in operation	2 W
	Battery	Not interchangeable, 450 mAh
	Battery Typical Recharge Time	20% to 70% within 1h
Data bus communication	Interface	NFC Bluetooth 5.0 Low Energy (BLE) USB 2.0 MP-Bus
	Range	Bluetooth: max. 10 m, depending on surroundings NFC: max. 2 cm
Safety data	Protection class IEC/EN	III, Protective Extra-Low Voltage (PELV)
	Degree of protection IEC/EN	IP20
	EMC	EN 302 489-1, EN 302 489-3, EN 302 489-17 EN 302 291-1, EN 302 291-2 EN 62479 EN 200328 FCC Part 15 Subpart B, Subpart C RSS Gen, RSS-102, RSS-210 MPE Calculations ANSI C95.1
	Certification IEC/EN	IEC/EN 62368-1 IEC/EN 60950-1 IEC/EN 60529
	Ambient temperature	0...50°C [32...122°F]
	Ambient temperature note	non-condensing
	Storage temperature	-20...55°C [-4....131°F]
	Storage temperature note	non-condensing
	Transportation temperature	-20...80°C [-4...176°F]
Weight	Weight	0.068 kg

Safety notes

- The device must not be used outside the specified field of application, especially not in aircraft or in any other airborne means of transport.
- Only authorised specialists may carry out installation. All applicable legal or institutional installation regulations must be complied with during installation.
- This device complies with part 15 of the FCC Rules. Operation is subject to the following two conditions: 1. This device may not cause harmful interference, and 2. This device must accept any interference received, including interference that may cause undesirable operation.

Product features

Standby mode

If the switched-on device is not in use, it automatically switches into standby mode to conserve battery power. It will switch back to normal operating mode when again connected with Belimo Assistant 2.

Transportation

Before transporting the device in an aircraft, it must be switched off.

Gecko film

The bottom of the device is equipped with Gecko® film.

On new devices, the Gecko® film has a protective film that must be removed before the first use.

The Gecko® film can be cleaned with a damp cloth or adhesive tape (e.g. Scotch®Magic™).

To ensure that the Gecko® film adheres well, the surfaces of the device to be configured and LINK.10 must be clean and dry.

Battery charging

To charge the battery, the device needs to be connected to a charger (e.g. for a smartphone, laptop, etc.) using the USB cable supplied. The device can be switched off or on and used during charging.

Charge the battery fully before using the device for the first time.

When the device is switched on, the battery is checked, and its status is indicated by a flashing LED pattern (see chapter Operating controls and indicators). Alternatively, the charging status of the battery can be read using Belimo Assistant 2.

Battery replacement

The battery cannot be replaced.

Retaining strap

The LINK.10 can be secured to the device to be configured with the retaining strap, e.g. on the connecting cable, shaft clamp, etc.

It is strongly recommended that you do so, especially when attaching the LINK.10 to devices with overhead or vertical installation orientation to avoid injury and damage to persons and property.

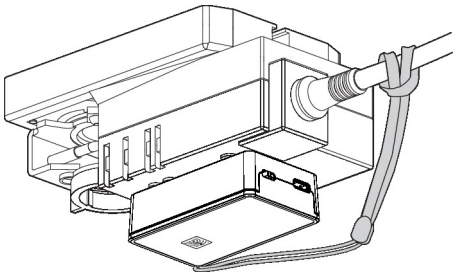

Accessories

Tools

Description	Type
Service tool for wired and wireless setup, on-site operation and troubleshooting.	Belimo Assistant 2

Electrical accessories

Description	Type
Connecting cable 5 m, A: RJ11 6/4 LINK.10, B: 6-pin for connection to service socket	ZK1-GEN
Connecting cable 5 m, A: RJ11 6/4 LINK.10, B: free wire end for connection to MP/PP terminal	ZK2-GEN

Operating controls and indicators

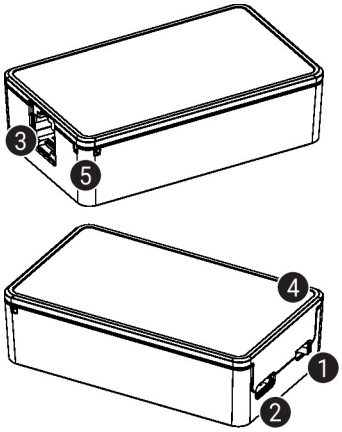

1. Power switch
2. USB socket (USB-C)
3. MP-Bus socket (RJ11)
4. LED
5. Mounting port for retaining strap

LED display

	Green	Red	Blue	White	Meaning / function
Power on (when switching the device on)	Flashing 1x	Off	Off	Off	Battery OK (>30%)
	Flashing 1x	Flashing 1x	Off	Off	Low battery, charging needed
Operating display (switched on)	Flashing every 5 s	Off	Off	Off	Switched on (standby mode)
	Off	Off	Flashing 1x	Off	Bluetooth connection established (pairing)
	Off	Off	Off	Permanently on	Look for NFC tag (device)
	Off	Off	Off	Flashing	NFC communication active
Charging the batteries (power switch off)	Flashing	Off	Off	Off	Charging the battery
	Permanently on	Off	Off	Off	Battery charged

Service

Using Belimo Assistant 2, device parameters can be modified. Belimo Assistant 2 can operate on a smartphone, tablet or PC. The available connection options vary depending on the hardware on which Belimo Assistant 2 is installed.

For more information about Belimo Assistant 2, refer to the Quick Guide – Belimo Assistant 2.

Service

Wireless connection

Belimo devices marked with the NFC logo can be accessed either directly with an NFC-capable smartphone or with a Bluetooth-capable smartphone connected to the Belimo Assistant Link.

The NFC logo on the LINK.10 should be directly aligned to the NFC logo of the NFC device.

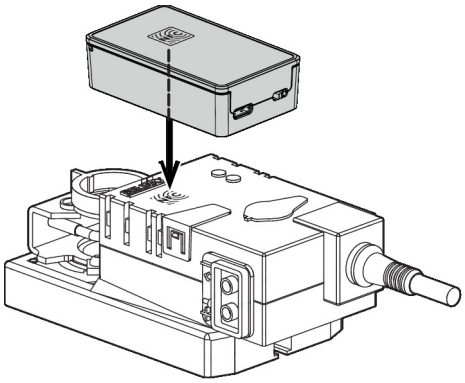

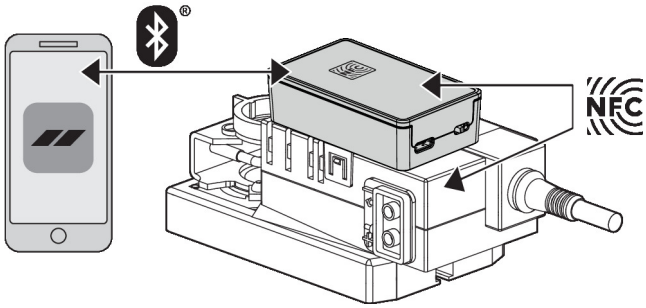

Service

Wired connection

Belimo devices can be accessed by connecting Belimo Assistant Link to the USB port on a PC or laptop and to the service socket or MP-Bus wire on the device.

Belimo Assistant 2 acts as MP client. Therefore, no other MP client shall be connected to the device.

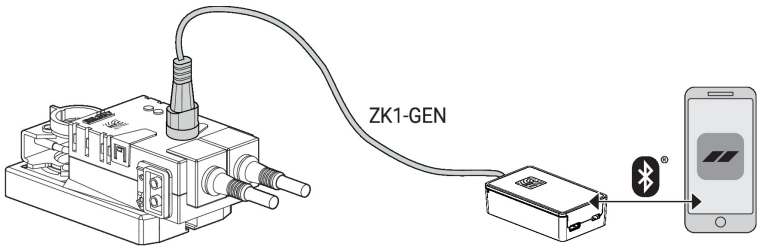

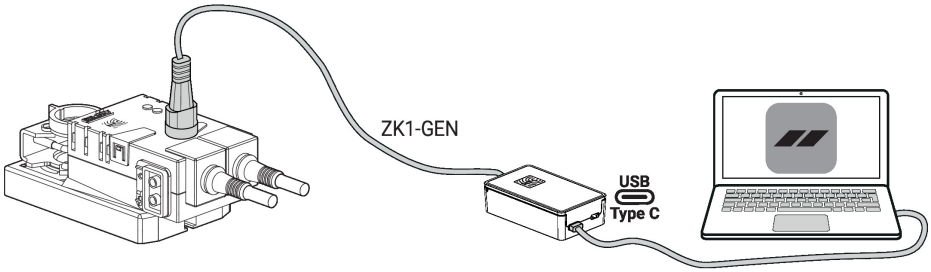

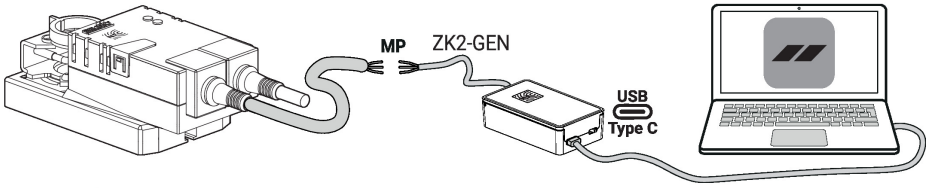

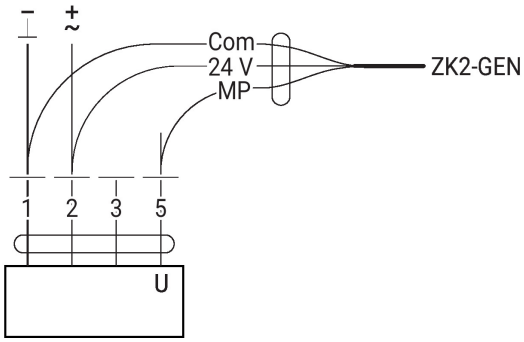

Dimensions

Type	B [mm]	L [mm]	H [mm]	Weight
LINK.10	45	75	21	0.068 kg

Further documentation

- Quick Guide – Belimo Assistant 2