71398-00001.E

1

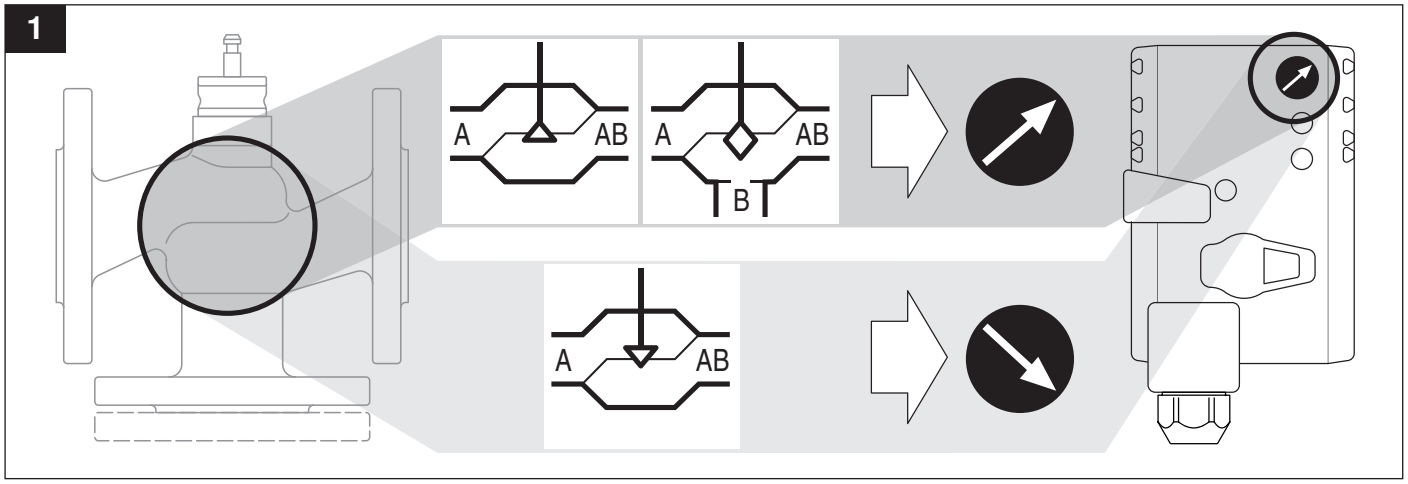

2

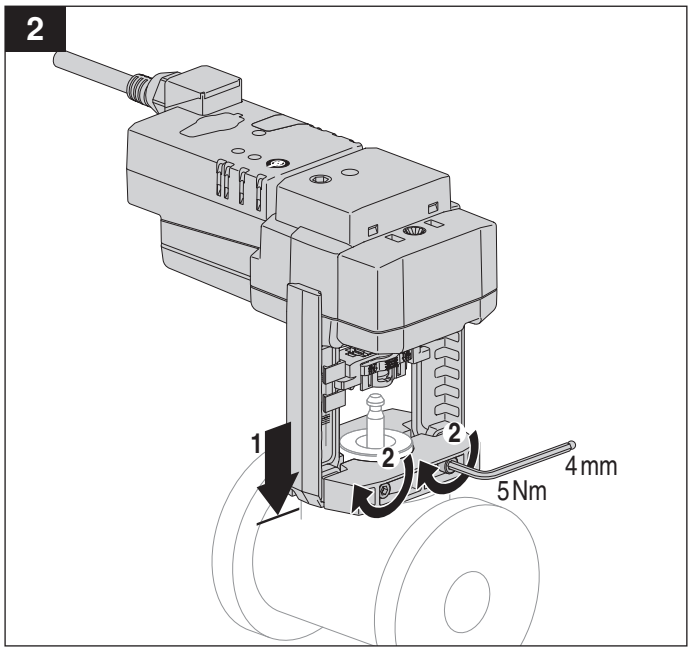

3

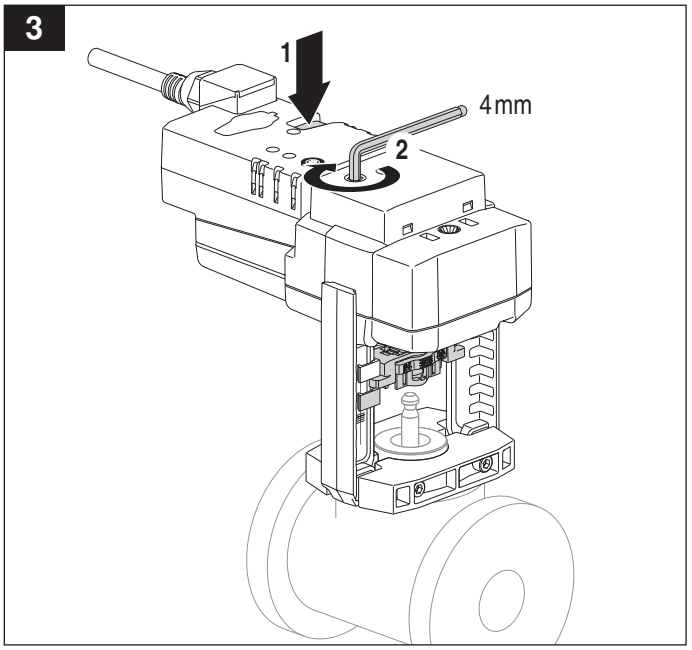

4

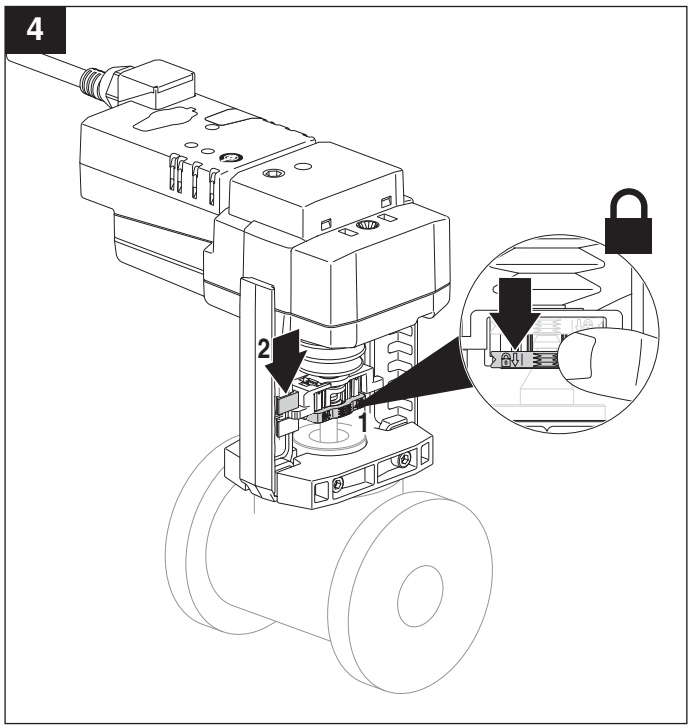

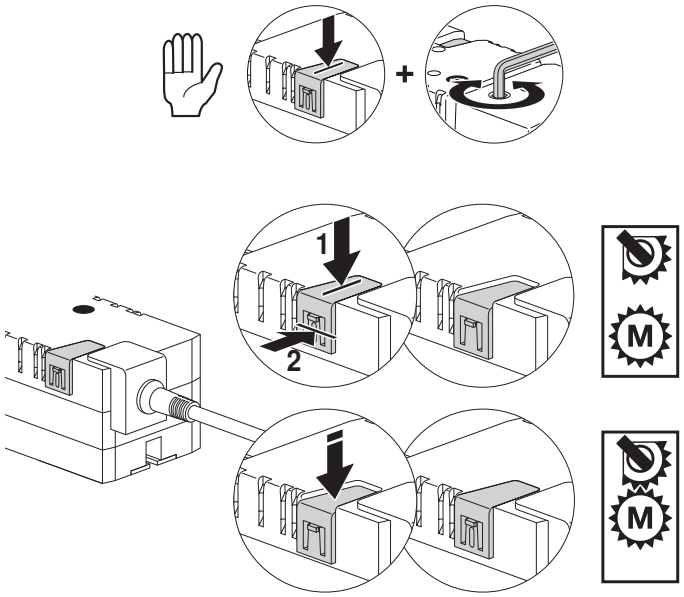

www.belimo.eu/safety

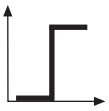

AC 24 V / DC 24 V

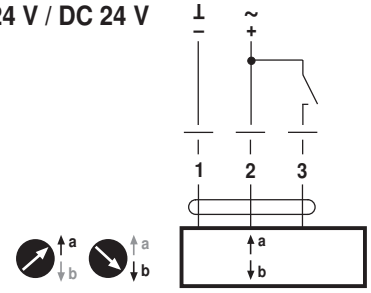

..V(C)24A

AC 230 V ⚠

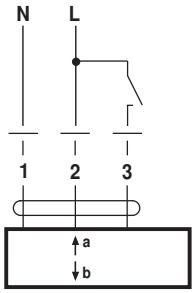

..V(C)230A

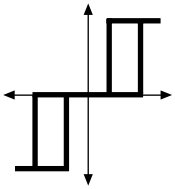

AC 24 V / DC 24 V

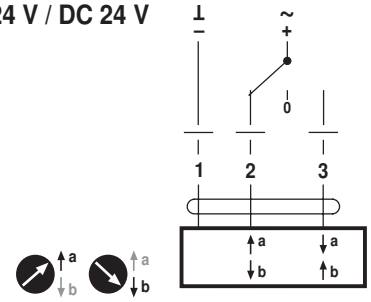

..V(C)24A

AC 230 V ⚠

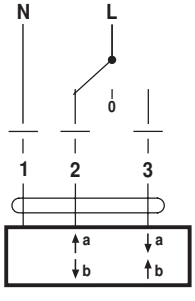

..V(C)230A

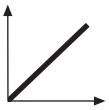

AC 24 V / DC 24 V

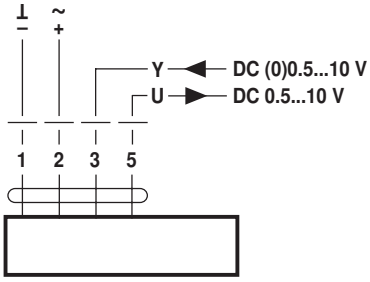

..V(C)24A-SZ

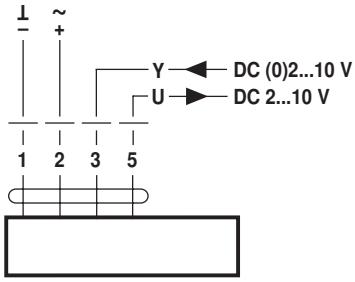

..V(C)24A-SR

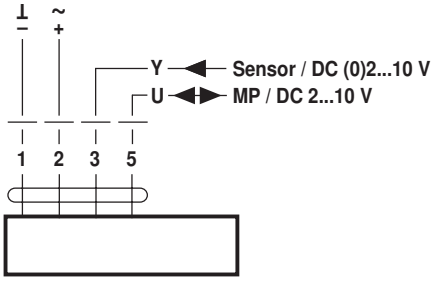

..V(C)24A-MP

AC 24 V / DC 24 V

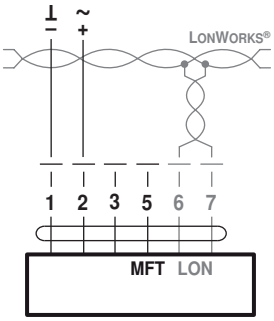

..V24ALON

BACnet MS/TP / Modbus RTU

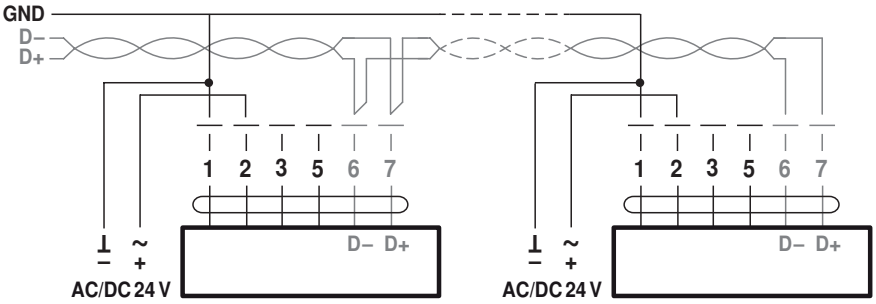

..V24-MOD ..V24-MOD

BACnet MS/TP / Modbus RTU

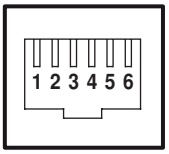

1 AC/DC 24 V
2 GND
3 D– (A)
4 D+ (B)
5 AC/DC 24 V
6 GND

..M24A-MOD-J6

BACnet MS/TP / Modbus RTU / analog

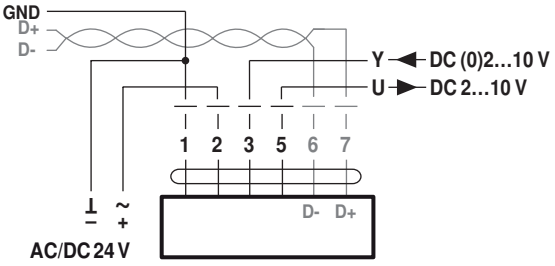

..V24A-MOD

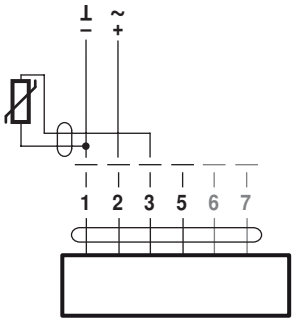

..LON / ..-MOD / ..-KNX

Ni1000	–28...+98°C	850...1600 Ω [2]
PT1000	–35...+155°C	850...1600 Ω [2]
NTC	–10...+160°C [1]	200 Ω...60 kΩ [2]

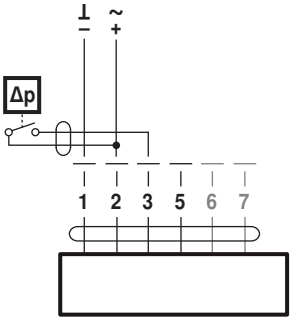

..LON / ..-MOD / ..-KNX

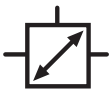

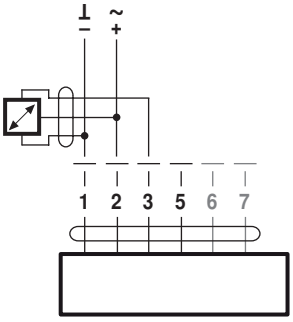

..LON / ..-MOD / ..-KNX