Air differential pressure sensor dual with two additional inputs

Differential pressure transmitter with two independent measuring systems. With 8 selectable ranges each and Modbus funtionality. Two additional inputs are available to which a potential-free contact or an NTC10k resistance sensor can be connected. The values at the additional inputs can be read out via Modbus. For monitoring over-, under- or the differential pressure of air and other non-flammable and non-aggressive gases. Typical application in HVAC systems for monitoring air filters, fans V-belts as well as the use in pressure differential systems. IP65 / NEMA 4X rated housing.

Picture may differ from product

## Type Overview

| Type | Measuring range [Pa] | Communication | Output signal active pressure | Output signal active volumetric flow | Burst pressure |
|---|---|---|---|---|---|
| 22ADP-154H | -100...2500 | Modbus RTU | 0...5 V, 0...10 V | 0...5 V, 0...10 V | 40 kPa |

## Technical data

| | | |
|---|---|---|
| **Electrical data** | Nominal voltage | AC/DC 24 V |
| | Nominal voltage range | AC 19...29 V / DC 15...35 V |
| | Power consumption AC | 4.3 VA |
| | Power consumption DC | 2.3 W |
| | Electrical connection | Pluggable spring loaded terminal block max. 2.5 mm² |
| | Cable entry | Cable gland with strain relief 2x ø6 mm |
| **Data bus communication** | Communication | Modbus RTU |
| | Number of nodes | Modbus see interface description |
| **Functional data** | Medium | Air |
| | Multirange | 8 measuring ranges selectable |
| | Voltage output | 2 x 0...5 V, 0...10 V, min. resistance 10 kΩ |
| | Analogue output | Output 0...5/10 V selectable with switch |
| | Typical response time | Adjustable 0.8 s or 4.0 s |
| | Notes | Additional inputs<br>Two inputs (IN1 and IN2) for connecting a potential-free contact (max. 0.3 mA @ 3.3 V) or an NTC10k resistance sensor (beta value sensor adjustable via Modbus register). |
| **Measuring data** | Measured values | Differential pressure<br>Volumetric flow |
| | Measuring fluid | Air and non-aggressive gases |
| **Specification Pressure** | Sensing element technology | Piezo measuring element |
| | Measuring range | -100...2500 Pa |

## Technical data

| | | | | | |
|---|---|---|---|---|---|
| **Specification Pressure** | Measuring range pressure settings | *del*Setting | Range [Pa] | Range [inch WC] | FactorySynonyms setting |
| | | S0 | 0...2500 | 0...10 | ✓ |
| | | S1 | 0...2000 | 0...8 | |
| | | S2 | 0...1500 | 0...6 | |
| | | S3 | 0...1000 | 0...4 | |
| | | S4 | 0...500 | 0...2 | |
| | | S5 | 0...250 | 0...1 | |
| | | S6 | 0...100 | 0...0.4 | |
| | | S7 | -100...100 | -0.4...0.4 | |
| | Accuracy | Deviation compared to the reference device<br>measuring range ≤500 Pa: ±5 Pa<br>measuring range >500 Pa: ±10 Pa | | | |
| | Long term stability | ±2.5% FSO (Full Scale Output) / 4 yr. | | | |
| **Specification Flow** | Measuring range volumetric flow | Adjustable via Modbus<br>Default setting: 0...750'000 $m^3/h$<br>Selectable units: $m^3/h$, $m^3/s$, cfm | | | |
| **Safety data** | Protection class IEC/EN | III, Safety Extra-Low Voltage (SELV) | | | |
| | Power source UL | Class 2 Supply | | | |
| | Degree of protection IEC/EN | IP65 | | | |
| | Degree of protection NEMA/UL | NEMA 4X | | | |
| | Housing | UL Enclosure Type 4X | | | |
| | EU Conformity | CE Marking | | | |
| | Certification IEC/EN | IEC/EN 60730-1 and IEC/EN 60730-2-6 | | | |
| | Quality Standard | ISO 9001 | | | |
| | UL Approval | cULus acc. to UL60730-1A/-2-6, CAN/CSA E60730-1 | | | |
| | Type of action | Type 1 | | | |
| | Rated impulse voltage supply | 0.8 kV | | | |
| | Pollution degree | 3 | | | |
| | Ambient humidity | Max. 95% RH, non-condensing | | | |
| | Ambient temperature | -10...50°C [14...122°F] | | | |
| | Fluid temperature | -10...50°C [15...120°F] | | | |
| **Materials** | Housing | Cover: PC, orange<br>Bottom: PC, orange<br>Seal: NBR70, black<br>UV resistant | | | |
| | Cable gland | PA6, black | | | |

## Safety notes

This device has been designed for use in stationary heating, ventilation and air-conditioning systems and must not be used outside the specified field of application. Unauthorised modifications are prohibited. The product must not be used in relation with any equipment that in case of a failure may threaten humans, animals or assets.

Ensure all power is disconnected before installing. Do not connect to live/operating equipment.

Only authorised specialists may carry out installation. All applicable legal or institutional installation regulations must be complied with during installation.

The device contains electrical and electronic components and must not be disposed of as household refuse. All locally valid regulations and requirements must be observed.

## Remarks

**Manual zero-point calibration**

After initial commissioning

To carry out the zero-point calibration, the device must be connected to the power supply at least 15 minutes beforehand.

Calibration interval

≤250 Pa 3 months

≤500 Pa 6 months

>500 Pa 12 months

Procedure

• Release both tube connectors from the pressure ports + and -

(Carry out the manual zero-point calibration even if the display shows 0.)

• Press the button "Manual zero-point calibration" until the LED lights permanently

• Wait until the LED flashes again and reinstall the tube connectors to the pressure ports (pay attention to + and -)

## Indicators

**Indicators**

Depending on the device and the number of measured values, the display automatically scales. Parameters, such as the fading in/out of measured values, brightness and traffic light function, are changed via the app or bus system. During the boot process, the software and hardware versions are displayed.

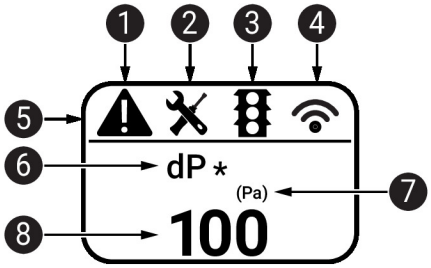


1. **Fault / sensor failure**
2. **Service / visual inspection due**
3. **TLF (traffic light function) active (thresholds for display colour changes)**
4. **Radio active (not available)**
5. **Status bar**
6. **Measured value (* appears when TLF function is activated for this value)**
7. **Unit of measure**
8. **Measured value**

## Parts included

| Description | Type |
|---|---|
| Mounting plate L housing | A-22D-A10 |
| Duct connector kit, PVC tube 2 m, 2x duct connector (plastic) for 22ADP-.. | A-22AP-A08 |
| Cable Gland with strain relief ø6...8 mm | |
| Dowels | |
| Screws | |

## Accessories

**Optional accessories**

| Description | Type |
|---|---|
| Duct connector, L 40 mm, metal, Tube connection 5 mm | A-22AP-A02 |
| Duct connector, L 100 mm, metal, Tube connection 5 mm | A-22AP-A04 |
| Connection adapter flex conduit, M20x1.5, for cable gland 1x 6 mm, Multipack 10 pcs. | A-22G-A01.1 |
| Connection adapter flex conduit, M20, for cable gland 2x 6 mm, Multipack 10 pcs. | A-22G-A02.1 |

**Tools**

| Description | Type |
|---|---|
| Belimo Duct Sensor Assistant App | Belimo Duct Sensor Assistant App |

## Accessories

| | Description | Type |
|---|---|---|
| | Bluetooth dongle for Belimo Duct Sensor Assistant App | A-22G-A05 |
| **Mechanical accessories** | **Description** | **Type** |
| | Duct connector kit, PVC tube 2 m, 2x duct connector (plastic) for 22ADP-.. | A-22AP-A08 |

* Bluetooth dongle A-22G-A05

Certified and available in North America, European Union, EFTA States and UK.

## Service

**Wired connection**

This sensor can be operated and configured using the Belimo Duct Sensor Assistant App.

When using the Belimo Duct Sensor Assistant App, the bluetooth dongle is required to enable communication between the app and the Belimo sensor.

For standard operation and configuration of the sensor, the bluetooth dongle and the Belimo Duct Sensor Assistant App are not needed. The sensor will arrive pre-configured with the factory default settings shown above.

Requirement:

- Bluetooth dongle (Belimo Part No: A-22G-A05)
- Bluetooth-capable smartphone
- Belimo Duct Sensor Assistant App (Google Play & Apple App Store)

Procedure:

- Plug the Bluetooth dongle into the sensor via the Micro-USB connector or by means of the interface PCB
- Connect Bluetooth-capable smartphone with Bluetooth dongle
- Select configuration in the Belimo Duct Sensor Assistant App

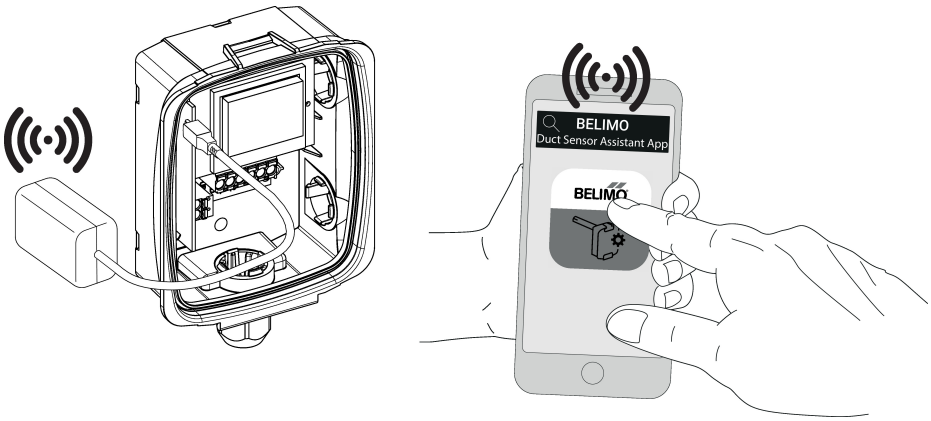


## Wiring diagram

**Supply from isolating transformer.**

**The wiring of Modbus RTU (RS-485) is to be carried out in accordance with applicable regulations (www.modbus.org). The device has switchable resistors for bus termination.**

**Modbus / BACnet: Supply and communication are not galvanically isolated. Connect earth signal of the devices with one another.**

## Wiring diagram

Manual zero-point calibration ①
Red: Error ②
Yellow: Tx ③
Yellow: Rx ④

Status LED ⑤ and ⑥
Slow flashing (0.5 Hz): Ok
Fast flashing (4 Hz): Error

Factory setting *
Pressure unit P
Response time T
Output signal U

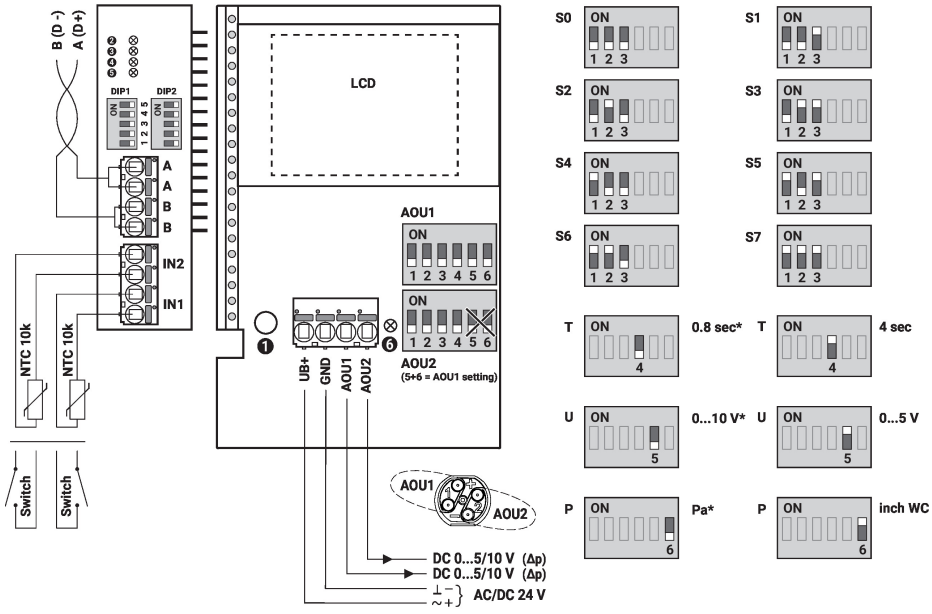


| *del*Setting | Range [Pa] | Range [inch WC] | Factory setting | Synonyms |
|---|---|---|---|---|
| S0 | 0...2500 | 0...10 | ✓ | |
| S1 | 0...2000 | 0...8 | | |
| S2 | 0...1500 | 0...6 | | |
| S3 | 0...1000 | 0...4 | | |
| S4 | 0...500 | 0...2 | | |
| S5 | 0...250 | 0...1 | | |
| S6 | 0...100 | 0...0.4 | | |
| S7 | -100...100 | -0.4...0.4 | | |

**Detailed documentation**

The separate document Sensor Modbus-Register informs about Modbus register, addressing, parity and bus termination (DIP1: address, DIP2: baud rate, parity, bus termination)

In addition to the information on the bus, the following analog outputs are available:

AOU1: differential pressure 1

AOU2: differential pressure 2

If required, the outputs AOU1 and AOU2 can be changed to volumetric flow via bus system.

The volumetric flow is calculated from the differential pressure, the k-factor and the height.

Factory setting for the k-factor is 1.00 and for the height 330 metres above sea level.

The values of the k-factor and the height can be changed via bus system.

The inputs IN1 and IN2 are read out via bus system, further information in the bus system document.

**Wiring RS-485 Modbus RTU**

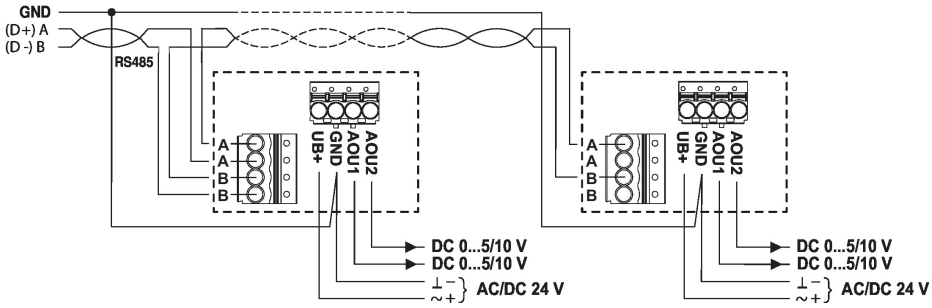

## Dimensions

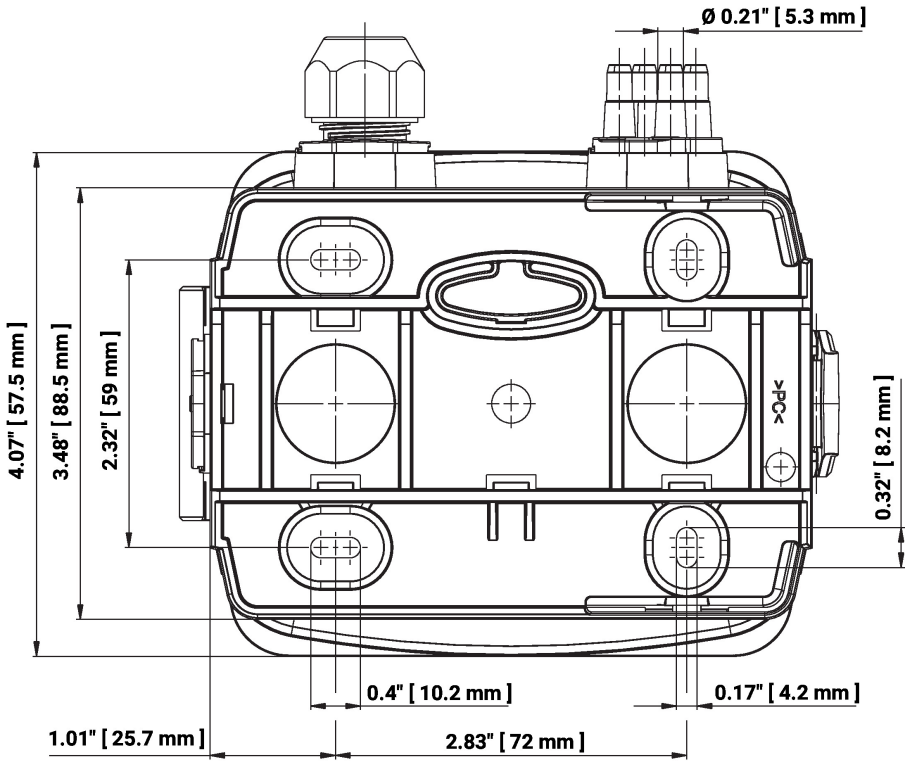


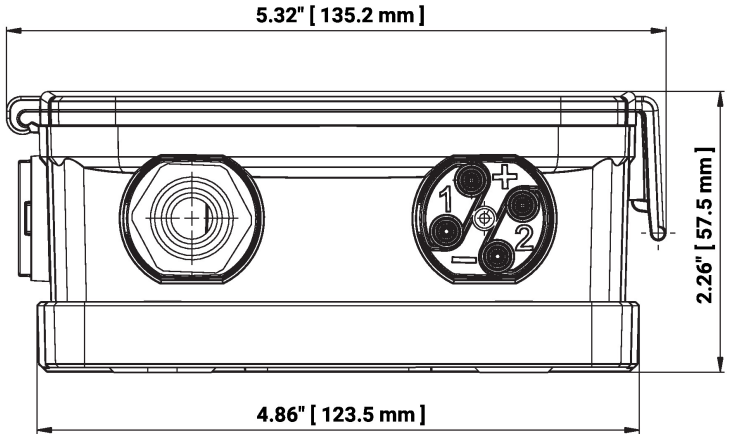


| Type | Weight |
|---|---|
| 22ADP-154H | 0.47 kg |

## Further documentation

- Modbus Interface description
- Installation instructions