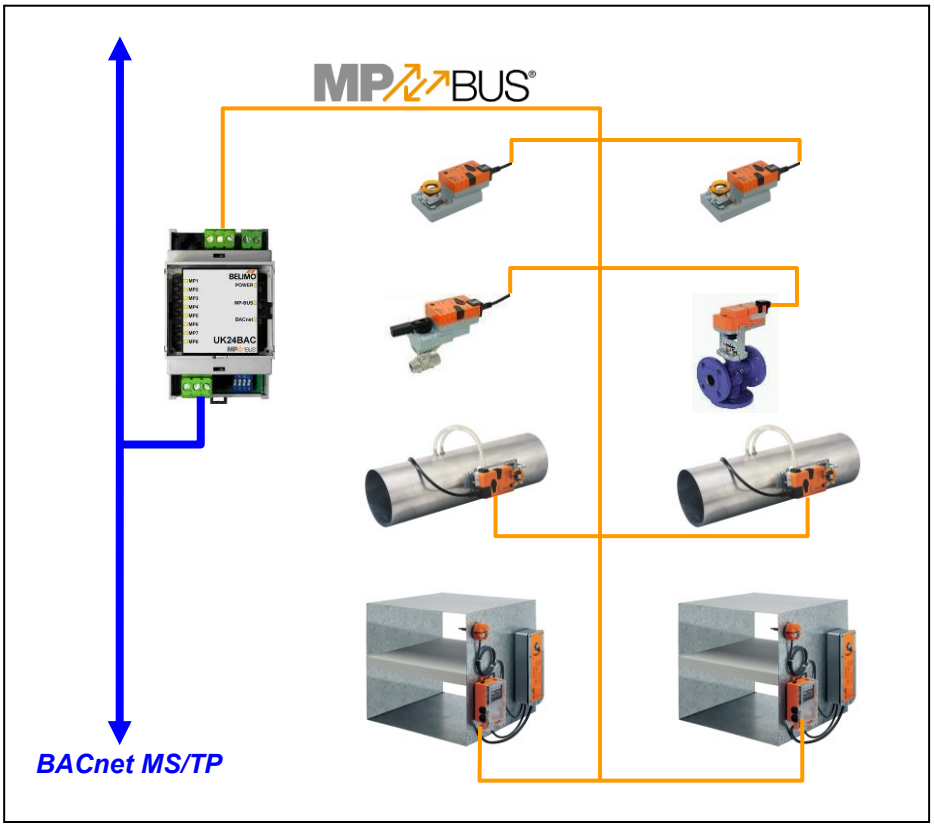

Belimo Gateway
MP to BACnet MS/TP - UK24BAC

Contents

Complete overview 2
Technical data 3
Safety notes 4
Product features 4
Installation and commissioning 4
Electrical installation 5
Dimensions 7
Operation 8
Protocol Implementation Conformance Statement - PICS 11
BACnet object description 13
Connecting Belimo Assistant 2 for parameterisation of the MP/MFT(2) actuators 15
Version overview 16

Complete overview – supported and unsupported devices		
✓	Product family	✗
..M(K)24A-MP,..H(K)24A-MP.00, ..F24A-MP, LU24A-MP, PMCA-BAC-S2-T (without Sensors)	Damper actuators	..24SR, 24-SR
..R(K)24A-MP, ..V(K)24A-MP, ..RF24A-MP PR..A-BAC-.. (without Sensors)	Valve actuators	JR..A-BAC..
CQ24A-MPL-.., CM24-MPL-..	MPL actuators	
..MV-D3-MP, ..HV-D3-MP	VAV	VRU-..-BAC*)
EP..R+MP, EP..F+MP	2/3-way EPIV	EP..R2+BAC*)
	6-way EPIV	EP..R-R6+BAC, EP..R6+BAC..
	Energy Valve	EV..R..+(K)BAC, EV..R2+MID 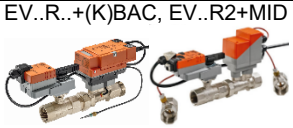
BKN230-24-C-MP with actuator	Fire protection	
	Sensors Meters	22PF-1U.., 22-PE-.., 22RT..

*) Possible in compatibility mode with limited mapping

The complete overview of supported devices is listed in the Brochure - Bus solutions from Belimo.

Gateway MP BACnet MS/TP. MP-bus-capable Belimo actuators can be connected on the MP-Bus side.

- **Interface MP – BACnet MS/TP**
- **Connection of MP/MPL/MFT(2) actuators and BF-TopLine actuators to BACnet MS/TP**
- **Up to 8 actuators can be connected**

Technical data

Electrical data	Nominal voltage		AC 24 V, 50/60 Hz / DC 24 V
	Power supply range		AC/DC 21.6…26.4 V
	For wire sizing		3 VA / 1.8 W
	Connection	BACnet MS/TP Supply MP-Bus Tool	Plug-screw terminal, 3-pin Plug-screw terminal, 2-pin Plug-screw terminal, 3-pin (All terminals suitable for 2 x 1.5 mm^2) RJ12
Functional data	Supported actuators		MP/MPL/MFT(2), BF-TopLine
	Quantity of actuators		max. 8 pcs.
	Communication with actuators		Belimo MP-Bus, Client-Server, 1'200 Bd
	Maximum signal conductor lengths MP		Dependent on the number of connected actuators, actuator type, type of supply and signal conductor cross-section For details see page 5
	BACnet	Device Profile Medium Number of nodes Baud rates Termination Polarisation	Application Specific Controller (B-ASC) MS/TP (RS-485) client, galvanically isolated max. 32 (without repeater) 9'600, 19'200, 38'400, 76'800 Bd, adjustable via DIP switch 120 Ω, adjustable via DIP switch 510 Ω, adjustable via DIP switch
Safety	Protection class		III Safety extra-low voltage
	EMC		CE pursuant to 2004/108/EC
	Ambient temperature		0…+40 °C
Installation / Dimension / Weight	Mounting		Control cabinet installation, can be snapped onto top hat rail 35 mm
	Dimensions		see page 7
	Weight		ca. 100 g

Safety notes

- **The device is not allowed to be used outside the specified field of application.**
- **It may be installed only by suitably trained personnel.**
- **The device does not contain any parts that can be replaced or repaired by the user and may only be opened at the manufacturer's site.**

Product features

Mode of operation

The UK24BAC allows the actuators to be controlled digitally via the MP-Bus and send back their current operating status. The control system information and the response is administered in BACnet objects in the UK24BAC and can be processed with BACnet services. This permits the actuator functions to be integrated directly into BACnet.

Sensor linking

One sensor can be connected per MP/MFT(2) actuator. This can be a passive resistance sensor (PT1000, NI1000 or NTC), an active sensor (output DC 0…10 V), or a switching contact. This provides a straightforward way of digitising the analogue signal of the sensors with the Belimo actuator and transferring it via UK24BAC to the BACnet.

MPL actuators don't provide a sensor input.

Installation and commissioning

Installation and wiring

The device is mounted on 35 mm top hat rails. The wiring is accomplished with plug-screw terminals.

Commissioning and parameterisation

Commissioning requires no configuration tools.

The BACnet MS/TP parameterisation of the device is accomplished with DIP switches:
MAC Address (TS), baud rate, bus terminator, biasing

The BACnet Device Address (Device Object Identifier, Device Object Name) is calculated based on the MAC Address setting (TS) and an adjustable offset value (see chapter 'PICS' for details). The resulting Device Address with factory-set offset and TS=1 is:
Device Object Identifier: 1001 (Instance)
Device Object Name: "UK24BAC_1001"

The parameterization of the sensors which are connected to the actuators and other settings can be done with any BACnet Client.

The addressing of the MP actuators is accomplished either with the keys under the front cover or with Belimo Assistant 2.

The MP-Bus assignment is determined automatically and continuously updated. No backup of the network structure takes place.

Electrical installation

Wiring diagram

AC/DC 24 V supply

Connection via safety isolation transformer!

Dimensioning of the supply

Also take into account the dimensioning specifications of the connected MP/MPL/MFT(2) actuators!

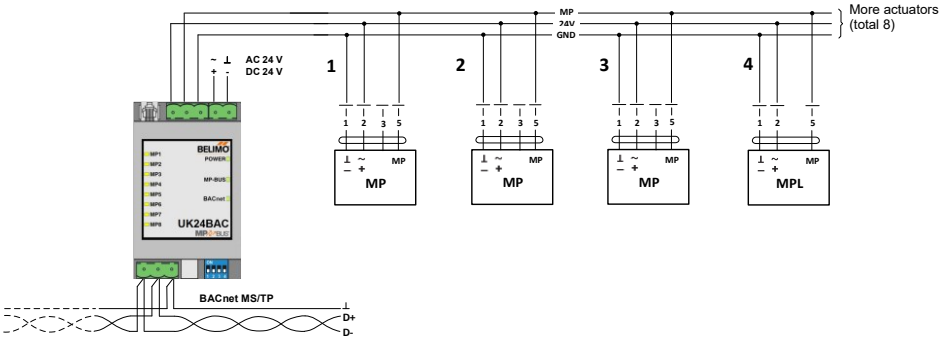

The wiring of BACnet MS/TP (RS485) is to be carried out in accordance with applicable directives. The device possesses resistors which can be switched on for bus connection and biasing.

The GND of the RS485 line is galvanically isolated from the MP-Bus GND. Additional galvanic separation shall be provided for segments crossing buildings.

Connection of the MP-Bus

- The network consists of a 3-pin connection (MP communication and 24 V supply).
- Possibility of connecting a maximum of 8 MP/MPL/MFT(2) actuators per network.
- Neither a special cable nor terminating resistors are required.
- The signal conductor lengths (for calculation, see below) are limited:
  – by the sum of the signal conductor data of the connected MP/MPL/MFT(2) actuators,
  – by the type of supply (AC 24 V via the bus or DC 24 V via the bus),
  – by the signal conductor cross-section.

With AC 24 V supply:
Maximum signal conductor length

L = max. cable length [m]

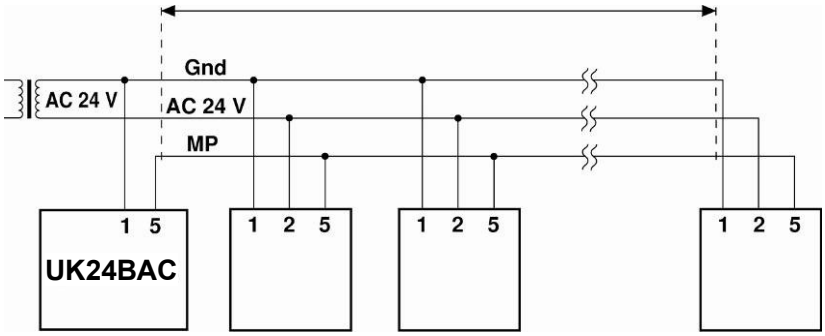

With AC 24 V supply:
(minimum transformer voltage 21.6V)
Total dimensioning
MP/MPL/MFT(2) actuators [VA]

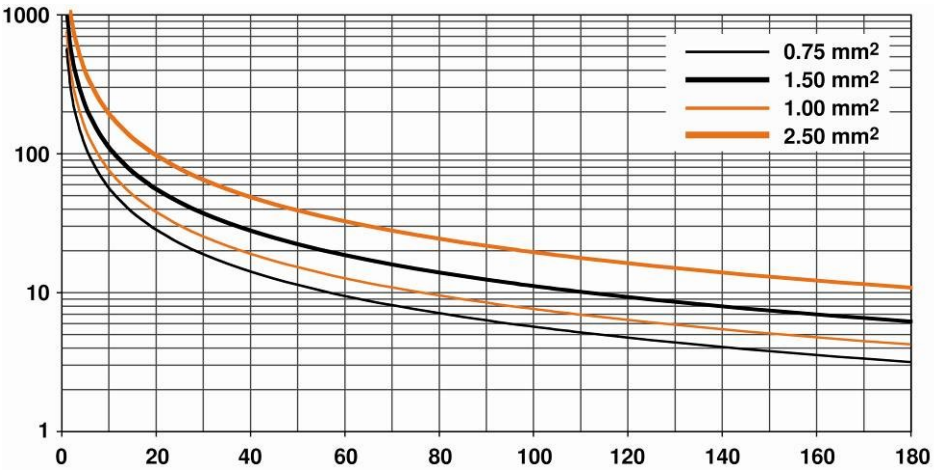

Power rating [VA]

For the calculation of the maximum cable length, the Belimo MP wiring calculator is available on the Belimo website for the complete MP-Bus range.

Electrical installation *(continued)*

With AC 24 V supply: Calculation of the maximum signal conductor lengths

The power ratings [VA] of the MP/MPL/MFT(2) actuators used are to be added, and the corresponding signal conductor lengths are to be read from the diagram.

Example:
The following is connected to the MP-Bus: 1 pc. NM24A-MP, 1 pc. SM24A-MP, 1 pc. LMV-D3-MP… and 1 pc. NV24A-MP

Total power rating: 5.5 VA + 6 VA + 5 VA + 5 VA = 21.5 VA

To be read out from the mass of curves:	
For cables with wire-Ø [mm²]	Cable length [m]
0.75	29
1.00	35
1.50	50
2.50	90

With local supply AC 24 V (on site): Maximum signal conductor length

The signal conductor lengths can be significantly increased if the actuators are supplied with AC 24 V locally via a separate transformer. The signal conductor lengths indicated in the table apply regardless of the performance data of the actuators connected to the UK24BAC.

Wire-Ø [mm²]	L = max. cable length [m]
0.75	800
1.00	
1.50	
2.50	

With DC 24 V supply: Maximum signal conductor length

L = max. cable length [m]

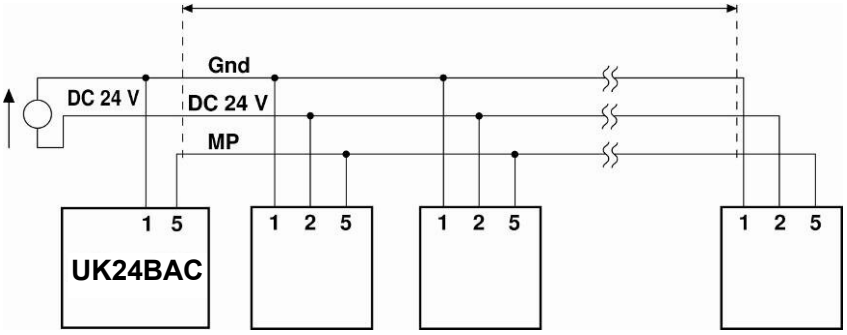

With DC 24 V supply: *(minimum supply voltage 21.6V)* Total power consumption MP/MPL/MFT(2) actuators [W]

Cable length vs. wire sizing power applies to DC supply (minimum supply voltage DC 24.0 V)

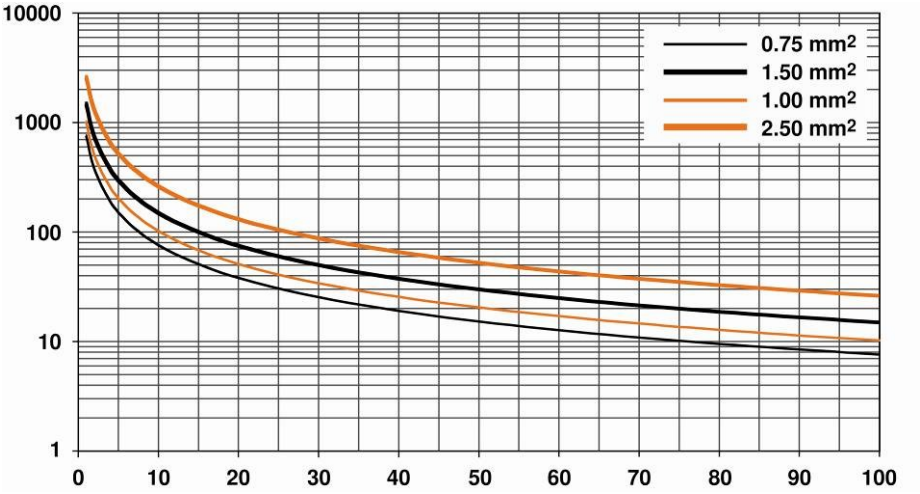

Note

Cable length vs. wire sizing power applies to DC supply (minimum supply voltage DC 24 V)

For the calculation of the maximum cable length, the Belimo MP wiring calculator is available on the Belimo website for the complete MP-Bus range.

Electrical installation *(continued)*

With DC 24 V supply: Calculation of the maximum signal conductor lengths

To be read out from the mass of curves:	
For cables with wire-Ø [mm²]	Cable length [m]
0.75	55
1.00	75
1.50	110
2.50	190

The power consumption [W] of the MP/MPL/MFT(2) actuators used is to be added, and the corresponding signal conductor lengths are to be read from the diagram.

Example:
The following is connected to the MP-Bus: 1 pc. NM24A-MP, 1 pc. SM24A-MP, 1 pc. LMV-D3-MP and 1 pc. NV24A-MP

Total power rating 3.5 W + 4 W + 3 W + 3 W = 13.5 W

Dimensions

Dimensional drawings [mm]

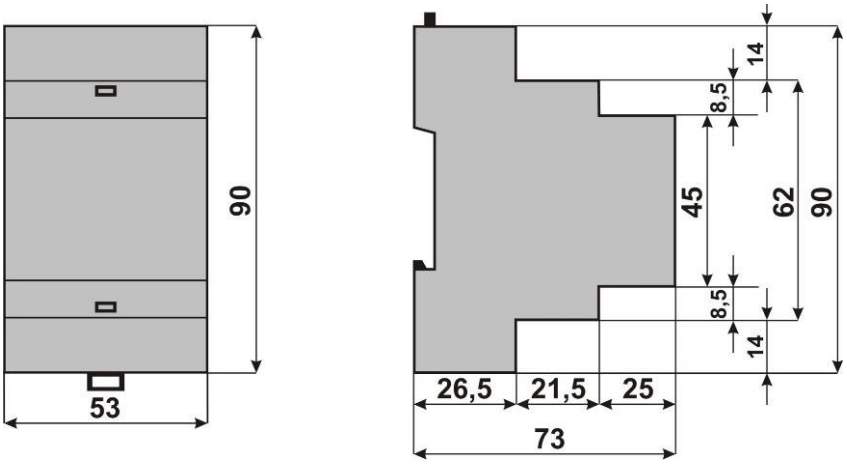

Operation

Legend

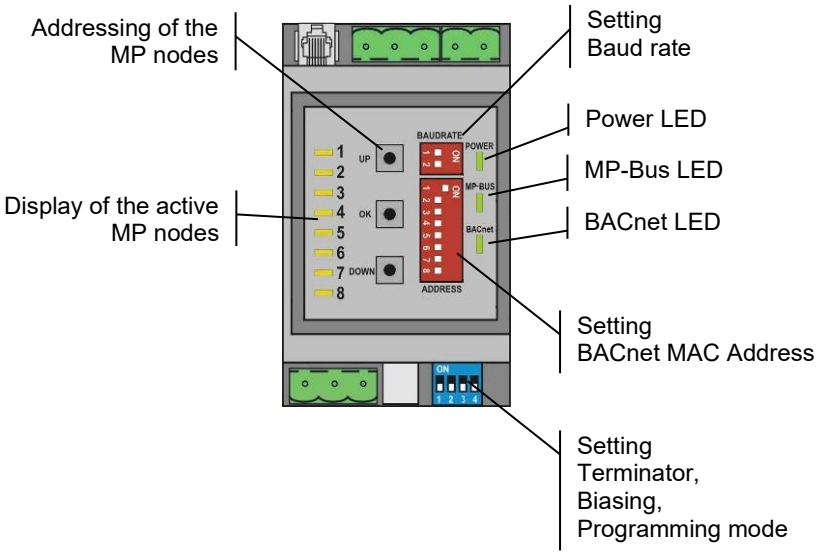

The illustration shows the operation elements of the device with the front cover open.

Setting the BACnet MAC address

The BACnet MAC address is set in binary form with the 7 DIP switches under the front cover. The valid address range is 1-127.

Values outside of this range will be interpreted as either 1 or 127, respectively.

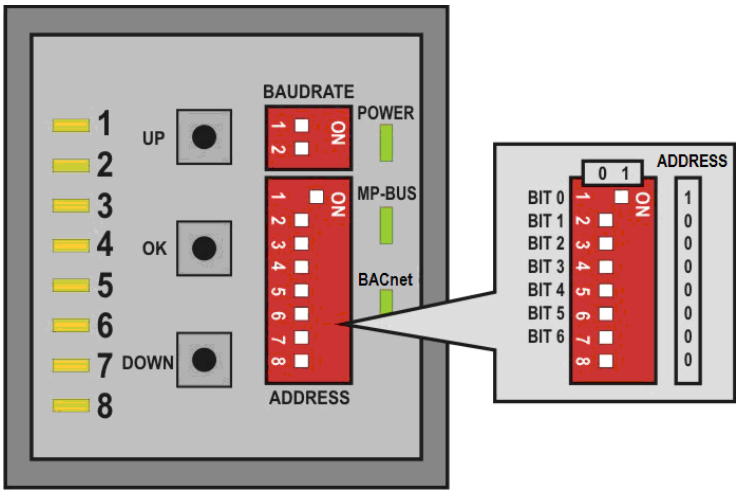

Operation *(continued)*

Setting the BACnet baud rate

The BACnet baud rate is set using the DIP switches under the front cover to the values 9'600, 19'200, 38'400 and 76'800.

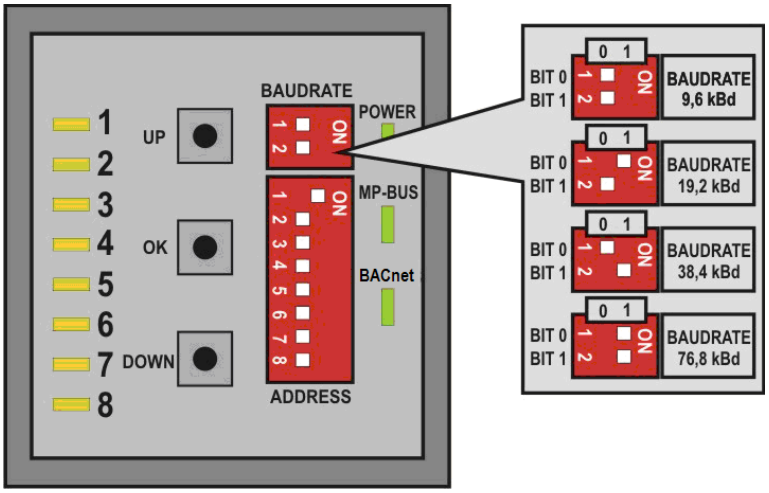

The RS485 line must be completed at both bus ends with one resistor each. A suitable 120 Ω element is present in the Gateway which can be switched with DIP switch 1 on the base plate.

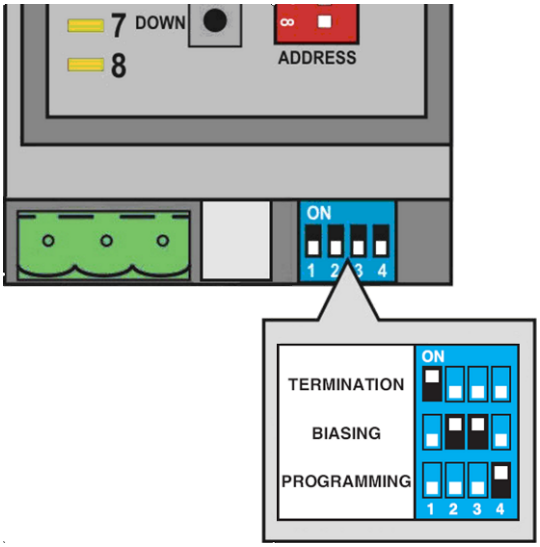

The RS485 line can be polarised with two resistors (DIP switches 2 and 3) in order to reduce interference effects during communications pauses. The biasing is implemented as a rule at one of the bus ends. Switches 2 and 3 must always be respectively activated or deactivated together.

Important:
The generally valid guidelines for BACnet MS/TP (RS485) are to be observed!

Firmware Upgrade

If required, the firmware of the gateway can be upgraded via USB link. The required Upgrade Tool can be obtained from Belimo.

Procedure:
1. Disconnect power supply from device
2. Set DIP switch 4 "Programming" to ON
3. Connect the device with the notebook via USB
4. Download of firmware according to special instruction
5. Remove USB cable
6. Set DIP switch 4 "Programming" to OFF
7. Connect power supply to device

Operation *(continued)*

Automatic scanning of the MP network

The MP-Bus assignment is determined automatically and continuously updated. No backup of the network structure takes place. The actuator information (e.g. series number, actuator type) is extracted as soon as one supported actuator is detected at the addresses MP1…MP8.
In the event of a communications interruption, the Gateway will discard the affected actuator after 10 seconds and reset the actuator register. Monitoring of the actuator is accomplished preferably with the datapoint "Actuator type" (Object_Name: NODE_TYPE).

Addressing MP actuators

The Gateway supports the assigning of addresses to the MP nodes by means of the keys UP, OK and DOWN, located behind the front cover.

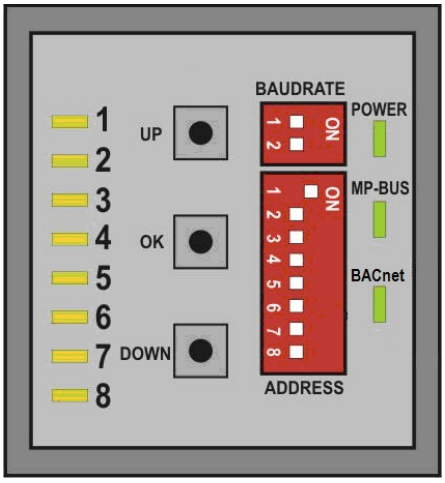

Procedure:

1. Press down the OK key and keep it down (approx.. 2 s) until LED1 and LED8 light up.
2. Select an address (LED1…LED8) with the keys UP and DOWN
3. Start addressing sequence with OK key
4. Acknowledge addressing of the respective actuator within 4 minutes;
   (depending on the type, using the address key, direction of rotation switch, ...)
5. Successful acknowledgement is made visible by the rapid flashing of the corresponding LEDx. Afterwards, the Gateway will switch to standard operation.

The addressing process can be interrupted at any time by pressing the OK key.

The de-addressing of a node is not supported.

Restore of Factory Settings

All non-volatile BACnet properties will be restored to factory default by pressing the OK button for more than 3 seconds while the device is starting.

Protocol Implementation Conformance Statement - PICS

General information

Date: 24. February 2023

Vendor Name: BELIMO Automation AG
Vendor ID: 423

Product Name: UK24BAC
Product Model Number: N/A

Applications Software Version: 1.12
Firmware Revision: 1.12
BACnet Protocol Revision: 1.12

Product Description:
The UK24BAC device is a gateway from MP to BACnet MS/TP. Up to eight MP-bus-capable Belimo actuators can be connected on the MP-Bus side. This permits the actuator functions as well as the connected sensors to be integrated directly into BACnet.
The datapoint mapping from MP to BACnet is fix defined. The configuration of the device is accomplished with DIP switches and with Standard BACnet clients.

BACnet Standard Device Profile: BACnet Application Specific Controller (B-ASC)

BACnet Interoperability Building Blocks supported:
Data Sharing - ReadProperty-B (DS-RP-B)
Data Sharing - ReadPropertyMultiple-B (DS-RPM-B)
Data Sharing - WriteProperty-B (DS-WP-B)
Data Sharing - WritePropertyMultiple-B (DS-WPM-B)
Data Sharing - COV-Unsolicited-B (DS-COVU-B)
Device Management - DynamicDeviceBinding-B (DM-DDB-B)
Device Management - DynamicObjectBinding-B (DM-DOB-B)
Device Management - DeviceCommunicationControl-B (DM-DCC-B)

Segmentation Capability: No

Data Link Layer Options: MS/TP client,
baud rates: 9'600, 19'200, 38'400, 76'800

Device Address Binding: No static device binding supported

Networking Options: None

Character Sets Supported: ANSI X3.4 / UTF-8

Standard objects (general)

These BACnet objects exist only once per device:

Datapoint	BACnet Object
-- Device	Device [x]
-- Device ID Offset	AV [1]
-- COV Mode	MV [1]

- The Device Object Identifier (Device-ID) is defined by the BACnet MAC address (TS) and the Device ID Offset: Device-ID=TS+Offset.
- The Device Object Name is defined by the Product Name and the Device-ID:
  e.g. "UK24BAC_1001"
  The calculated value can be overwritten using WriteProperty services. Reset to automatically calculation by writing an empty object name (empty or space character only).

PICS

(continued)

Standard objects (per actuator)

The information of the connected actuators is digitized per node in the objects as listed below (whereas n corresponds to the MP address 1-8):

Datapoint	BACnet Object	Air Water	VAV	Fire	MPL
Actuator type	MV [2] [n*100+0]	✓	✓	✓	✓
Set point [%]	AO [1] [n*100+0]	✓	✓		✓
Override operation	MV [1] [n*100+1]	✓	✓	✓ [3]	
Actual position [%]	AI [2] [n*100+0]	✓	✓	✓	✓
Relative volumetric flow [%]	AI [2] [n*100+1]		✓		
Absolute position/stroke	AI [2] [n*100+2]	✓	✓	✓	
Absolute volumetric flow	AI [2] [n*100+3]		✓		
Sensor type	MV [n*100+3]	✓	✓		
Sensor value	AI [2] [n*100+4] BI [2] [n*100+0]	✓	✓		
Summary fault	BV [2] [n*100+0]	✓	✓	✓	
Command	MV [n*100+2]	✓	✓	✓	✓
Min [%]	AV [n*100+1]	✓	✓		
Max [%]	AV [n*100+2]	✓	✓		
Nominal volumetric flow	AV [n*100+3]		✓		

1) This object is commandable.
2) This object supports unsolicited COV.
3) This Present_Value must be periodically updated.

Object processing

Object type	Optional properties	Writeable properties
Analog Input	Description COV_Increment Reliability	COV_Increment
Analog Output	Description	Present_Value Relinquish_Default
Analog Value	Description	Present_Value [2]
Binary Input	Description Active_Text Inactive_Text	
Binary Value	Description Active_Text Inactive_Text	
Device	Description Location Max_Master Max-Info-Frames	Object_Name Description Location APDU_Timeout Number_Of_APDU_Retries Max_Master Max_Info_Frames
Multi-state Value	Description State_Text Relinquish_Default [3] Priority_Array [3]	Present_Value [1] Relinquish_Default [3]

1) Present_Value writeable for OVERRIDE_[n] and COV_MODE
2) Present_Value writable for MIN_STPT_[n] und MAX_STPT_[n]
3) Only if object commandable: OVERRIDE_[n]

- The properties Object_Name, Description and Location of the Device Object support up to 64 characters (all other character strings are read-only).
- The device does not support the CreateObject and DeleteObject service.

PICS

(continued)

Service processing

- The device supports DeviceCommunicationControl service. The execution of the service is password protected (Password: BELIMO).

BACnet object description

Object Name	Object Type / Instance	Description	Values	Default
Device_Name	Device [x]		-	-
OFFSET_DEV_ID	Analog Value [1]	This value plus the parameterized MAC address (0…127) define the Device-ID.	0…4'194'056 (2^{22}-247)	1000
COV_MODE	Multi-state Value [1]	Setting of the COV mode If COV is enable, changed values will be transmitted as broadcast (local or global). The property *COV_Increment* must be adjusted accordingly for *Analog Input* objects.	OFF LOCAL GLOBAL	OFF
NODE_TYPE_[n]	Multi-state Value [n*100+0]	Actuator type; the allocation may deviate from the basic category with some actuators. Note: In the event of a communications interruption, the Gateway will discard the affected actuator after 10 seconds and reset the actuator type to 0. Monitoring of the actuator is thus accomplished preferably with this object. Each MP node has an unambiguous series number (e.g. 00839-31324-064-008). This number is show in the property *Description*.	NONE AIR/WATER GLOBE VALVE FIRE VAV/EPIV MPL	NONE
REL_STPT_[n]	Analog Output [n*100+0]	Setpoint for actuator setting in % The default value can be parameterized with property *Relinquish_Default*. In the case of actuators for fire dampers, the control must be accomplished through override control (see OVERRIDE).	0…100	0
OVERRIDE_[n]	Multi-state Value [n*100+1]	Overriding the setpoint with defined values The default value can be parameterized with property *Relinquish_Default*. For fire dampers: Due to safety considerations, the only override values permitted in the case of actuators for fire dampers are OPEN and CLOSE. The operating position (OPEN) must also be repeated within 120 seconds. If the override command is not renewed, then the Gateway will move the actuator into safety position (*Relinquish_Default* is not writable).	NONE OPEN CLOSE MIN/VMIN MID/VMID MAX/VMAX	NONE

BACnet object description *(continued)*

Object Name	Object Type / Instance	Description	Values	Default
ACT_VALUE_[n]	Analog Input [n*100+0]	Actual position % The disengaged gear is represented in the Status-Flags (OVERRIDDEN) and in the property Reliability.	0…100	-
REL_FLOW_[n]	Analog Input [n*100+1]	Relative volumetric flow in % of Vnom This value is available only for VAV controllers and EPIV units (see NODE_TYPE). For all other types, 65535 will be entered.	0…100	-
ABS_POS_[n]	Analog Input [n*100+2]	Absolute position/stroke The unit depends on the node type: [°] or [mm] The disengaged gear is represented in the Status-Flags (OVERRIDDEN) and in the property Reliability. If function is not supported by the actuator, a value of 65535 will be entered.	0…65535	-
ABS_FLOW_[n]	Analog Input [n*100+3]	Absolute volumetric flow (or pressure) The unit depends on the node type: [m3/h] for VAV controllers [Pa] for VAV controller in STP mode [l/min] for EPIV units	0…65535	-
SNS_TYPE_[n]	Multi-state Value [n*100+3]	Sensor type connected to the actuator; in the absence of sensor specification, the wiring at the Y input of the MP actuator will have the effect of a local override. A conversion to °C is implemented for the common temperature sensors (PT1000, NI1000, NTC10K). The setting is stored persistently.	NONE ACTIVE PASSIVE 1K PASSIVE 20K SWITCH PT1000_°C NI1000_°C NTC10K_°C	NONE
SENSOR_[n]	Analog Input [n*100+4]	Actual sensor value The value is dependent on the setting in SNS_TYPE. Alternatively, the Binary Input SWITCH may be used for switch contacts.	0…65535	-
SWITCH_[n]	Binary Input [n*100+0]	Actual sensor value for switch contacts The value is dependent on the setting in SNS_TYPE. Alternatively, the Analog Input SENSOR may be used for switch contacts.	INACTIVE ACTIVE	-
SUM_FAULT_[n]	Binary Value [n*100+0]	Summary fault (e.g. mechanical overload) The fault can be reset with COMMANDS [Reset] or with Belimo Assistant 2.	NONE FAULT	-
COMMANDS_[n]	Multi-state Value [n*100+2]	Command Initiation of actuator functions for maintenance and test; the selected command is transmitted to the actuator, after which the Present-Value will be reset to NONE.	NONE ADAPTION TEST RESET	NONE

BACnet object description *(continued)*

Object Name	Object Type / Instance	Description	Values	Default
MIN_STPT_[n]	Analog Value [n*100+1]	Minimum limit (position or flow) in % Attention: Changing the limit may result in malfunction of the device. Cyclic updates are to be avoided.	0…100	-
MAX_STPT_[n]	Analog Value [n*100+2]	Maximum limit (position or flow) in % Attention: Changing the limit may result in malfunction of the device. Cyclic updates are to be avoided.	20…100	-
NOM_FLOW_[n]	Analog Value [n*100+3]	Nominal volumetric flow (or pressure) The unit depends on the node type: [m3/h] for VAV controllers [Pa] for VAV controller in STP mode [l/min] for EPIV units	0…65535	-

Connecting Belimo Assistant 2 for parameterisation of the MP/MFT(2) actuators

The MP network can be scanned, actuators can be addressed and actuator-specific parameters (e.g. running time) can be adjusted with Belimo Assistant 2.

Belimo Assistant 2 can be accessed directly on the MP-Bus via the RJ12 socket of the UK24BACMOD. The Gateway recognises the connected Belimo Assistant 2 automatically and stops communications with the MP devices.

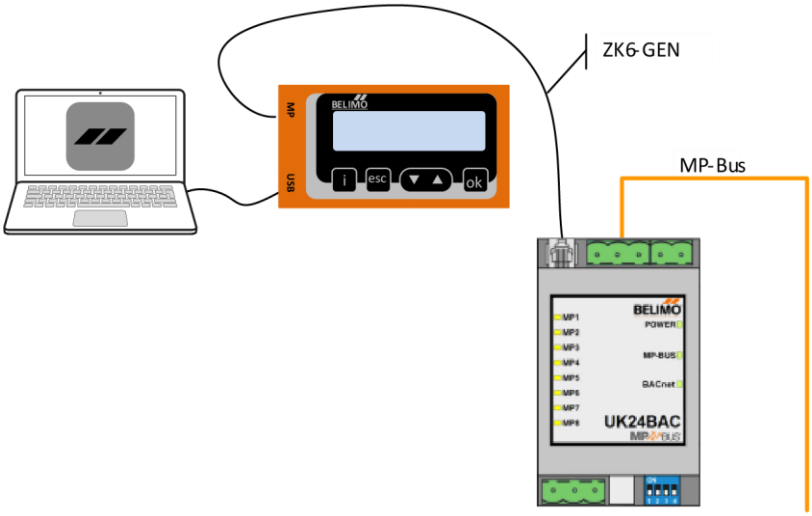

Note: ZK2-GEN to be used with LINK.10.

Version overview

Firmware V1.12

New functions/modifications:

- MP-Bus communication is guaranteed even with high communication load on BACnet MS/TP
- Maximum telegram length is taken into account when responding to ReadPropertyMultiple requests
- WhoIs requests with wildcard in InstanceNumber are ignored

Known issues: –

Firmware V1.10

New functions/modifications:

- The disengaged gear is represented on the objects ACT_VALUE_[n] and ABS_POS_[n] using the Status-Flags (OVERRIDDEN) and now also in the property Reliability.
- Changes of the Status-Flags generate COV-Notifications (if enabled)
- Handling of network priorities corrected
- Increased MS/TP communication quality on MS/TP

Known issues: –

Firmware V1.09

New functions/modifications:

- The disengaged gear is represented on the objects ACT_VALUE_[n] and ABS_POS_[n] using the Status-Flags (OVERRIDDEN)

Known issues: –

Firmware V1.08

New functions/modifications:

- OFFSET_DEV_ID Setting adjusted to 0…4'194'056 (2^{22}-247)
- New functional profile "MPL actuator" supported (e.g. CQ24A-MPL)
- Integrated sensor conversion Ω → °C for PT1000, NI1000 and NTC5K
- Nominal volumetric flow (VAV/EPIV) as BACnet Object available
- MP addressing function reworked

Known issues: –

Firmware V1.07

New functions/modifications:

- WritePropertyMultiple service supported
- Feedback values are rounded
- Unconfirmed-COV-Notification for Multi-state Value fixed (wrong datatype)
- PropertyIdentifier for COV_Increment fixed (wrong ID)
- Sending of malformed packets fixed (in relation with WhoIs requests)
- Instability on high baudrate (76.8k) resolved

Known issues: –

Firmware V1.06

New functions/modifications:

- Unsolicited-COV-Reporting for volumetric flow added
- Engineering units (position/volumetric flow/pressure) is updated (if supported by actuator)
- Instability on high bus load resolved

Known issues:

- WritePropertyMultiple service not supported

Firmware V1.03

New functions/modifications:

- Property State_Text changed to BACnetARRAY
- Property Description in SUM_FAULT object with bit field (internal state) completed
- Unsolicited-COV-Reporting supported (see known issues)
- Absolute position ABS_POS_[n] calculated

Known issues:

- WritePropertyMultiple service not supported
- Engineering units (position and volumetric flow) not for all actuator types updated
- Unsolicited-COV-Reporting for volumetric flow not supported

All inclusive.

Belimo is the global market leader in the development, production, and sales of field devices for the energy-efficient control of heating, ventilation and air-conditioning systems. The focus of our core business is on damper actuators, control valves, sensors and meters.

Always focusing on customer value, we deliver more than only products. We offer you the complete product range for the regulation and control of HVAC systems from a single source. At the same time, we rely on tested Swiss quality with a five-year warranty. Our worldwide representatives in over 80 countries guarantee short delivery times and comprehensive support through the entire product life. Belimo does indeed include everything.

The "small" Belimo devices have a big impact on comfort, energy efficiency, safety, installation and maintenance.

In short: Small devices, big impact.

- 5-year warranty
- On site around the globe
- Complete product range
- Tested quality
- Short delivery times
- Comprehensive support

BELIMO Automation AG
Brunnenbachstrasse 1, 8340 Hinwil, Switzerland
+41 43 843 61 11, info@belimo.ch, www.belimo.com