Cloud capable and communicative rotary actuator for ball valves

- Torque motor 20 Nm
- Nominal voltage AC/DC 24 V
- Control modulating, communicative, hybrid, Cloud
- Communication via BACnet/IP, Modbus TCP and Cloud
- Ethernet 10/100 Mbit/s, TCP/IP, integrated web server
- Conversion of sensor signals

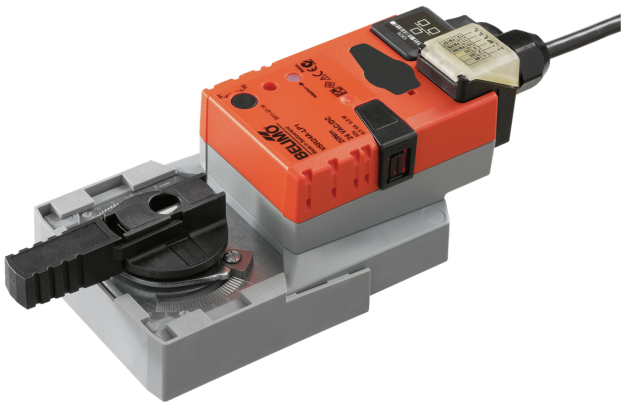

Picture may differ from product

Technical data

Electrical data	Nominal voltage	AC/DC 24 V
	Nominal voltage frequency	50/60 Hz
	Nominal voltage range	AC 19.2...28.8 V / DC 21.6...28.8 V
	Power consumption in operation	6 W
	Power consumption in rest position	1.25 W
	Power consumption for wire sizing	8 VA
	Connection supply / control	Cable 1 m, 6x 0.5 mm²
	Connection Ethernet	RJ45 socket
	Parallel operation	Yes (note the performance data)
Data bus communication	Communicative control	Cloud BACnet/IP Modbus TCP
	Number of nodes	BACnet / Modbus see interface description
Functional data	Torque motor	20 Nm
	Operating range Y	2...10 V
	Input impedance	34 kΩ
	Operating range Y variable	0.5...10 V
	Position accuracy	±5%
	Manual override	with push-button, can be locked
	Running time motor	90 s / 90°
	Running time motor variable	90...350 s
	Sound power level, motor	45 dB(A)
	Adaptation setting range	manual
	Position indication	Mechanical, pluggable
Safety data	Protection class IEC/EN	III, Safety Extra-Low Voltage (SELV)
	Degree of protection IEC/EN	IP40 IP54 when using protective cap or protective grommet for RJ45 socket
	EMC	CE according to 2014/30/EU
	Type of action	Type 1
	Rated impulse voltage supply / control	0.8 kV
	Pollution degree	3
	Ambient humidity	Max. 95% RH, non-condensing
	Ambient temperature	-30...50°C [-22...122°F]
	Storage temperature	-40...80°C [-40...176°F]
	Servicing	maintenance-free
Weight	Weight	1.0 kg

Safety notes

- This device has been designed for use in stationary heating, ventilation and air-conditioning systems and must not be used outside the specified field of application, especially in aircraft or in any other airborne means of transport.
- Outdoor application: only possible in case that no (sea) water, snow, ice, insolation or aggressive gases interfere directly with the device and that it is ensured that the ambient conditions remain within the thresholds according to the data sheet at any time.
- Only authorised specialists may carry out installation. All applicable legal or institutional installation regulations must be complied with during installation.
- The device may only be opened at the manufacturer's site. It does not contain any parts that can be replaced or repaired by the user.
- Cables must not be removed from the device.
- To calculate the torque required, the specifications supplied by the damper manufacturers concerning the cross-section and the design, as well as the installation situation and the ventilation conditions must be observed.
- The device contains electrical and electronic components and must not be disposed of as household refuse. All locally valid regulations and requirements must be observed.

Product features

Operating mode

The actuator is controlled via the Cloud, BACnet/IP or Modbus TCP and drives to the position defined by the control signal. Various data points can be written and read via the same interfaces.

Hybrid mode:

The actuator receives its analogue control signal from the higher-level controller and drives to the position defined. Using the Cloud, BACnet/IP or Modbus TCP, various data points can be read and, with the exception of the control signal, written.

Converter for sensors

Connection option for two sensors (passive sensor, active sensor or switching contact). The actuator serves as an analogue/digital converter for the transmission of the sensor signal to the higher level system.

Communication

The configuration can be carried out through the integrated web server (RJ45 connection to the web browser), by communicative means or via the Cloud.

Additional information regarding the integrated web server can be found in the separate documentation.

"Peer to Peer" connection
http://belimo.local:8080
The Notebook must be set to "DHCP".
Make sure that only one network connection is active.
Standard IP address:
http://192.168.0.10:8080
Static IP address
Password (read-only):
User name: «guest»
Password: «guest»

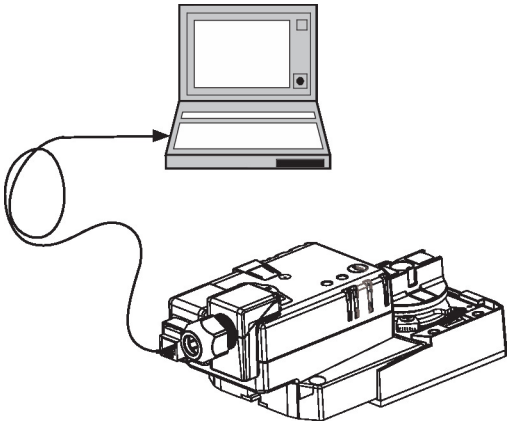

Simple direct mounting

Straightforward direct mounting on the ball valve with only one central screw. The assembly tool is integrated in the plug-in position indicator. The mounting orientation in relation to the ball valve can be selected in 90° steps.

Data recording

The recorded data (integrated data recording for 13 months) can be used for analytical purposes.

Download csv files via web browser.

Manual override

Manual override with push-button possible (the gear train is disengaged for as long as the button is pressed or remains locked).

Product features

Adjustable angle of rotation
Adjustable angle of rotation with mechanical end stops.

High functional reliability
The actuator is overload protected, requires no limit switches and automatically stops when the end stop is reached.

Home position
The first time the supply voltage is switched on, i.e. at the time of commissioning, the actuator carries out an adaptation, which is when the operating range and position feedback adjust themselves to the mechanical setting range.

The actuator then moves into the position defined by the control signal.

Adaptation and synchronisation
An adaptation can be triggered manually by pressing the "Adaptation" button. Both mechanical end stops are detected during the adaptation (entire setting range).

The actuator then moves into the position defined by the control signal.

Accessories

Tools

Description	Type
Service tool, with ZIP-USB function, for configurable and communicative Belimo actuators, VAV controller and HVAC performance devices	ZTH EU
Connecting cable 5 m, A: RJ11 6/4 LINK.10, B: 6-pin for connection to service socket	ZK1-GEN
Belimo Assistant Link Bluetooth and USB to NFC and MP-Bus converter for configurable and communicative devices	LINK.10

Electrical accessories

Description	Type
Grommet for RJ connection module, Multipack 50 pcs.	Z-STRJ.1

Electrical installation

Supply from isolating transformer.
Parallel connection of other actuators possible. Observe the performance data.

Wire colours:
1 = black
2 = red
5 = orange
10 = yellow/black
11 = yellow/pink
12 = yellow/grey

AC/DC 24 V

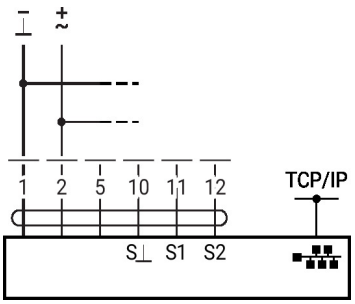

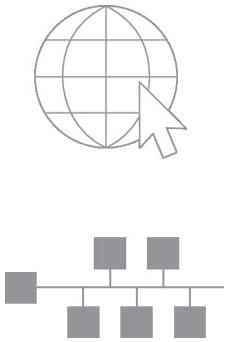

Optional connection via RJ45 (direct connection to notebook / connection via Intranet or Internet) for access to the integrated web server

Further electrical installations

The connection diagrams shows connections for the first sensor on terminal S1, while the second sensor can be connected identically on terminal S2.

Parallel use of different sensor types is permitted.

For hybrid operation, S1 is used for the control signal Y and must be configured as an active sensor.

Functions with specific parameters (configuration necessary)

TCP/IP (Cloud) / BACnet/IP / Modbus TCP

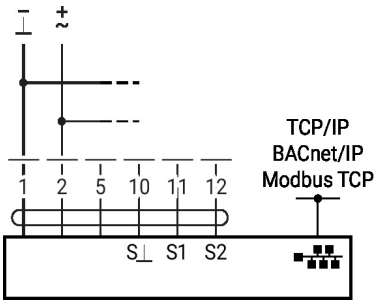

TCP/IP (Cloud) / BACnet/IP / Modbus TCP with analogue setpoint (hybrid operation)

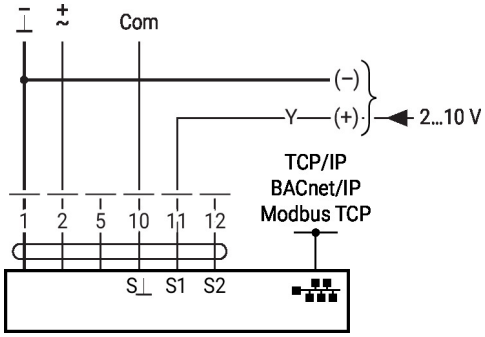

Sensor connection

Connection of active sensors

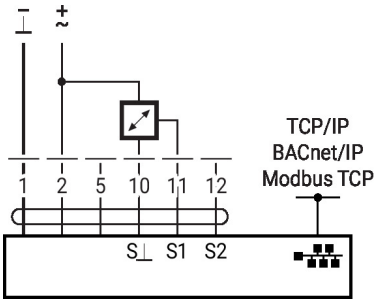

Switching contact connection

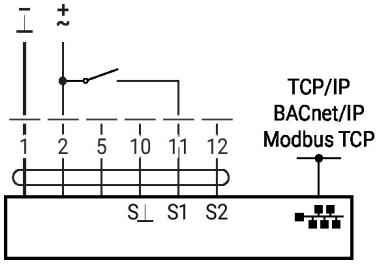

Connection of passive sensors

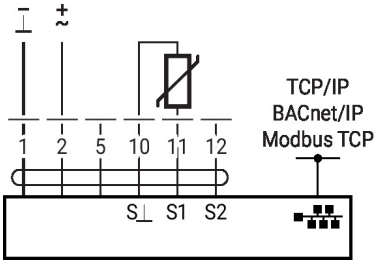

Operating controls and indicators

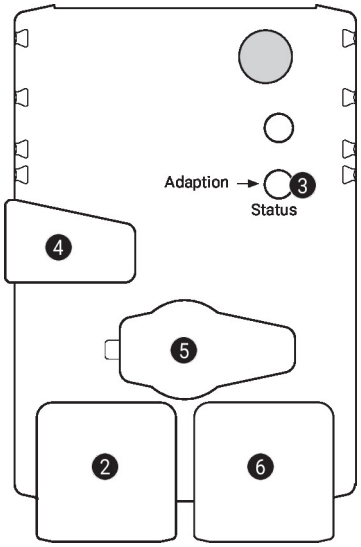

2 LED display green

Off:	No power supply or wiring error
On:	Actuator starts operation
Flickering:	In operation

3 Push-button and LED display yellow

Off:	Standard mode
On:	Adaptation or synchronisation process active
Press button:	Triggers angle-of-rotation adaptation, followed by standard mode

4 Manual override button

Press button:	Gear train disengages, motor stops, manual override possible
Release button:	Gear train engages, standard mode

5 Service plug
For connecting configuration and service tools

6 RJ45 socket
For the connection of TCP/IP (Cloud), BACnet IP and Modbus TCP

Dimensions

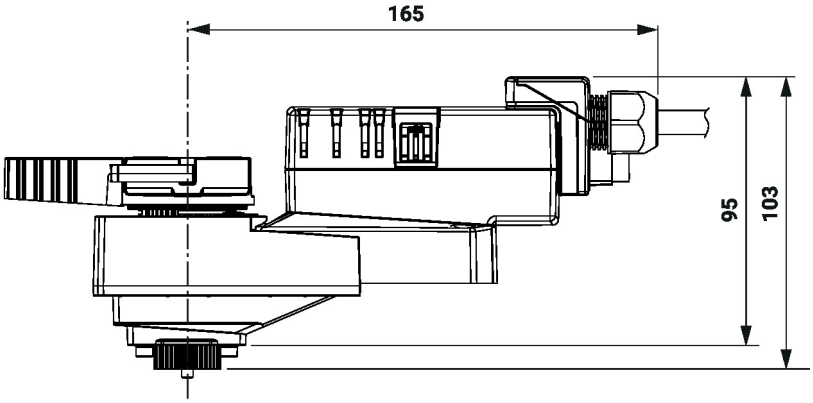

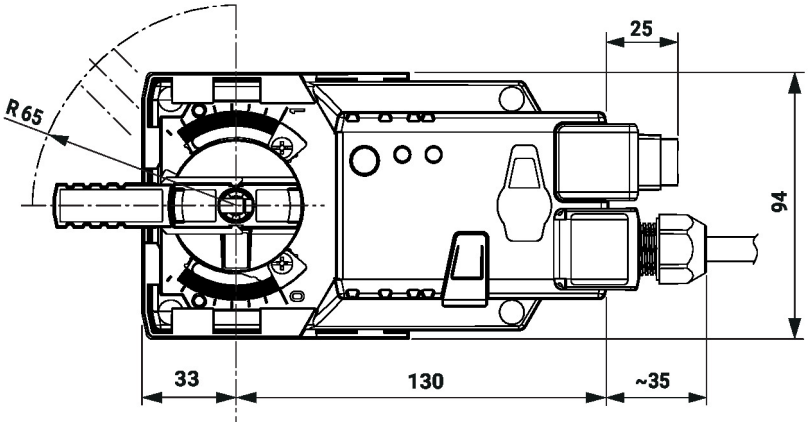

Further documentation

- General notes for project planning
- Instruction Webserver
- BACnet Interface description
- Modbus Interface description
- Description clientAPI