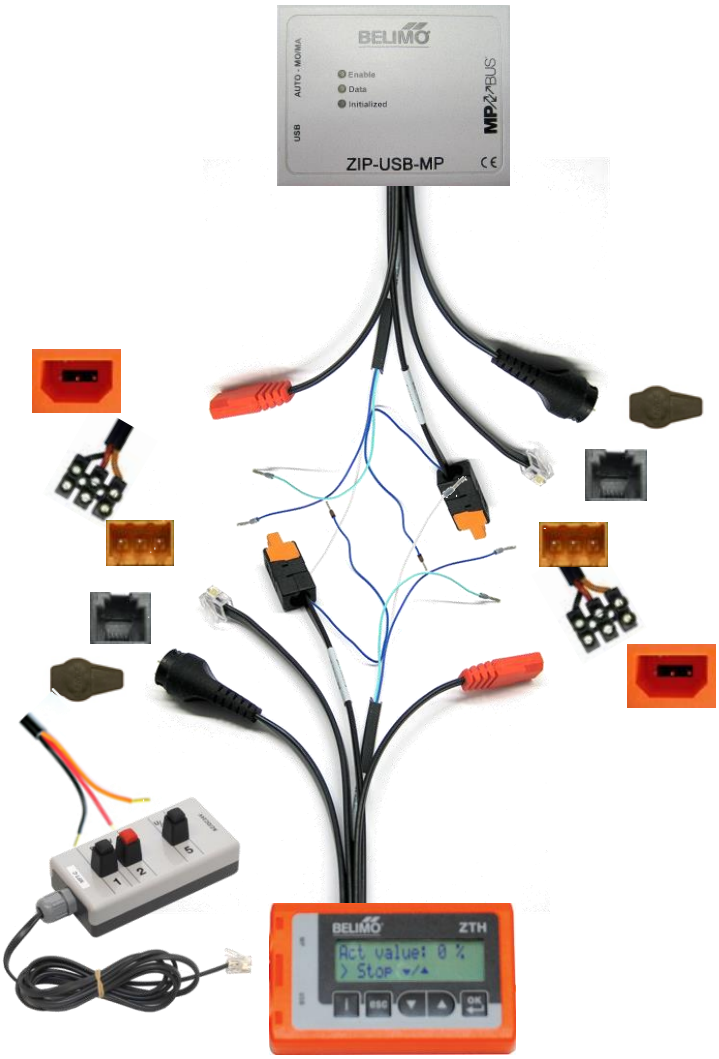

Tool Connections / Anschlüsse

Inhalt

Overview by connections / Übersicht nach Anschlüssen 2
Overview by devices/ Übersicht nach Geräten 3
Connections / Anschluss ZIP-USB-MP 6
Connection / Anschluss ZTH EU / ZTH-GEN 10
Direct connection / Direktanschluss MFT-C 13
MP-Bus Tester ZTH-EU 14

Overview by connections
Übersicht nach Anschlüssen

Connection Anschluss	Matching Cable Passendes Kabel	MP level converters and devices MP-Pegelkonverter und Geräte	Page Seite
Service plug / Servicestecker	ZK1-GEN	ZIP-USB-MP	6
		ZTH EU / ZTH-GEN	10
Junction box / Anschlussdose	ZK2-GEN	ZIP-USB-MP	6
		ZTH EU / ZTH-GEN	10
		MP-Bus Tester	14
Weidmüller Plug / Weidmüller Stecker	ZK4-GEN	ZIP-USB-MP	8
		ZTH EU / ZTH-GEN	11
		MP-Bus Tester	14
RJ12 Socket / RJ12 Anschlussbuchse	ZK6-GEN	ZIP-USB-MP	7
		ZTH EU / ZTH-GEN	11
		MP-Bus Tester	15
CR24 & NMV-D2M Socket / CR24 & NMV-D2M Anschlussbuchse	ZK1-VAV	ZIP-USB-MP	9
		ZTH EU / ZTH-GEN	12
Direct connection / Direktanschluss	MFT-C	ZIP-USB-MP	13
		ZTH EU / ZTH-GEN	13

Overview by devices / Übersicht nach Geräte

ZTH EU / ZTH-GEN	**ZK1-GEN**	**Actuator / Antrieb**	10
	ZK2-GEN	**Junction box / Anschlussdose**	10
	ZK4-GEN	**VRP-M** 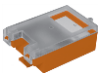	11
		BKN230-24MP	11
	ZK6-GEN	**VRD3**	11
	ZK1-VAV	**NMV-D2-M**	12
		CR24	12
	MFT-C	**Actuator / Antrieb**	13

Overview by devices / Übersicht nach Geräte

Device Geräte	Cable Kabel	Connection Anschluss	Page Seite
ZIP-USB-MP	ZK1-GEN	Actuator / Antrieb	6
	ZK2-GEN	Junction box / Anschlussdose	6
		PC-Tool (MP-Master)	6
		MP-Bus Monitor	7
		MP-Bus Tester	14
	ZK6-GEN	COU24A-MP	7
		UK24MOD / UK24BAC	8
	ZK4-GEN	UK24LON / UK24EIB	8
		VRP-M 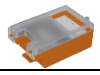	9
		BKN230-24MP	9
	ZK1-VAV	NMV-D2-M	9
		CR24	10
	MFT-C	Actuator / NG-Antrieb	13

Overview by devices / Übersicht nach Geräten

Device Geräte	Cable Kabel	Connection Anschluss	Page Seite
MP-Bus Tester ZTH-EU 	ZK2-GEN 	MP-Bus	14
	ZK4-GEN 	VRP-M 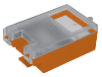	14
		BKN230-24-MP 	14
	ZK6-GEN 	UK24MOD / UK24BAC 	15

Connections / Anschluss ZIP-USB-MP

ZK1-GEN to actuator /Service socket

ZK1-GEN an Antrieb / Servicebuchse

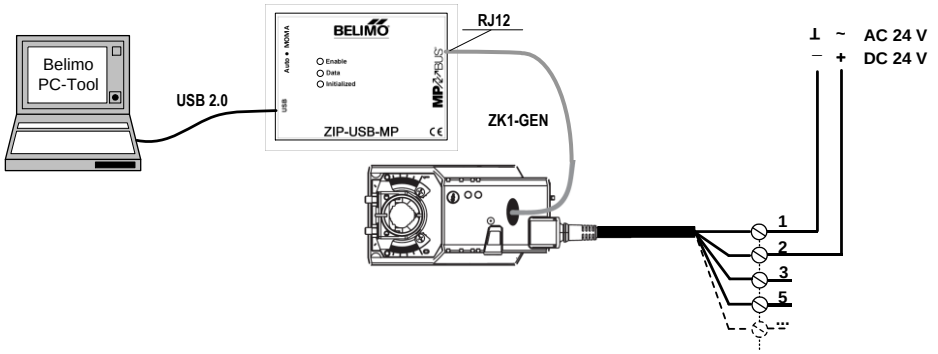

ZK2-GEN to junction box

ZK2-GEN an Anschlussdose

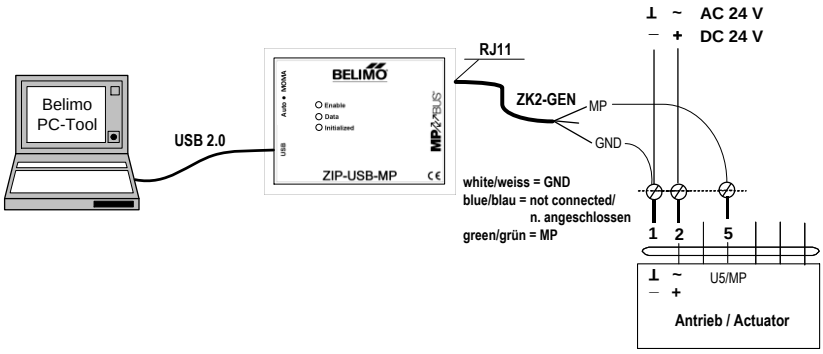

ZK2-GEN to MP bus (PC-Tool as MP-Master)

ZK2-GEN an MP-Bus (PC-Tool als MP-Master)

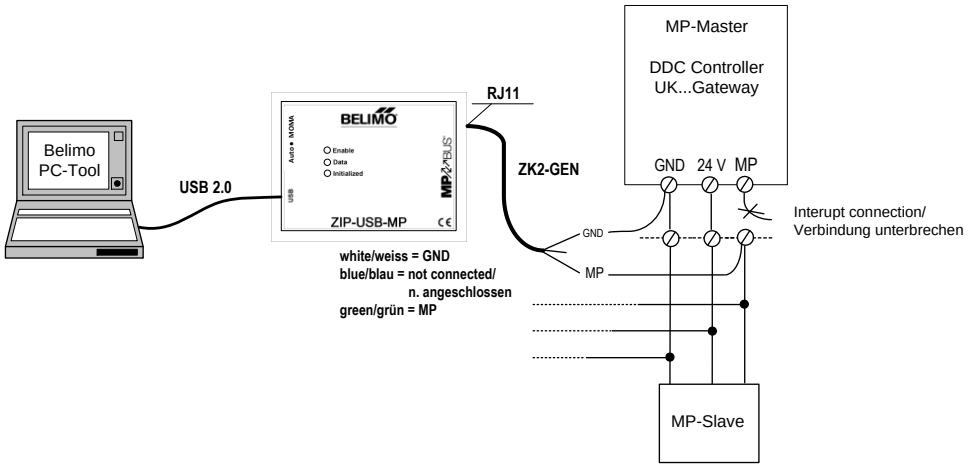

Connections / Anschluss ZIP-USB-MP

ZK2-GEN to MP bus (monitor mode)

ZK2-GEN an MP-Bus (Monitor-Betrieb)

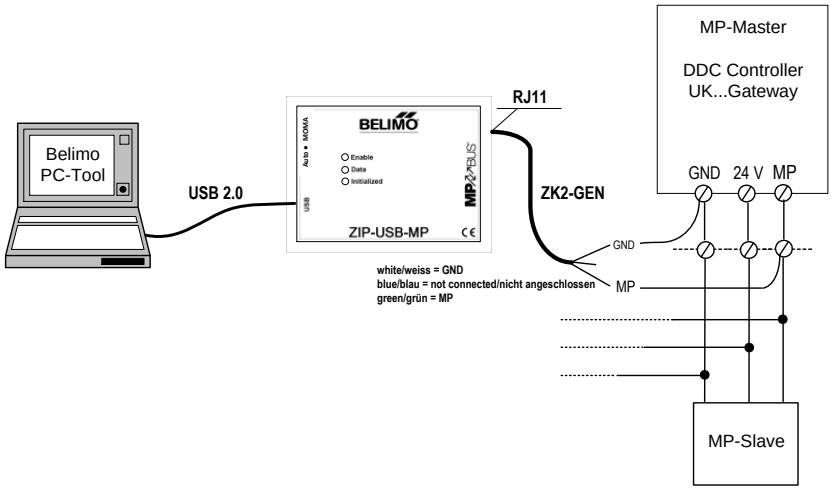

ZK6-GEN to COU24-A-MP

ZK6-GEN an COU24-A-MP

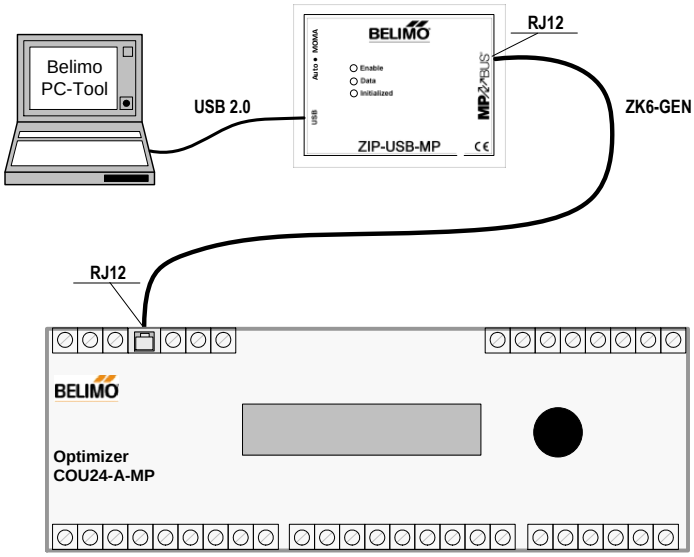

Connections / Anschluss ZIP-USB-MP

ZK6-GEN to UK24MOD / UK24BAC

ZK6-GEN an UK24MOD / UK24BAC

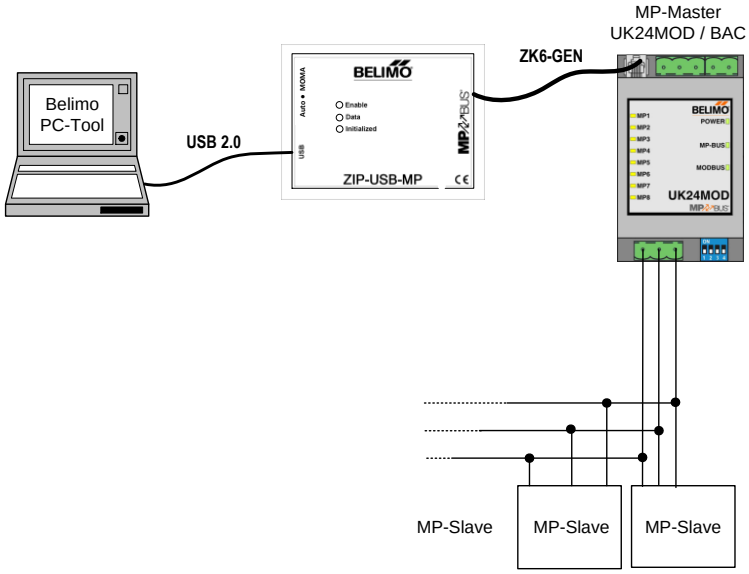

ZK4-GEN to UK24LON / UK24EIB

ZK4-GEN to UK24LON / UK24EIB

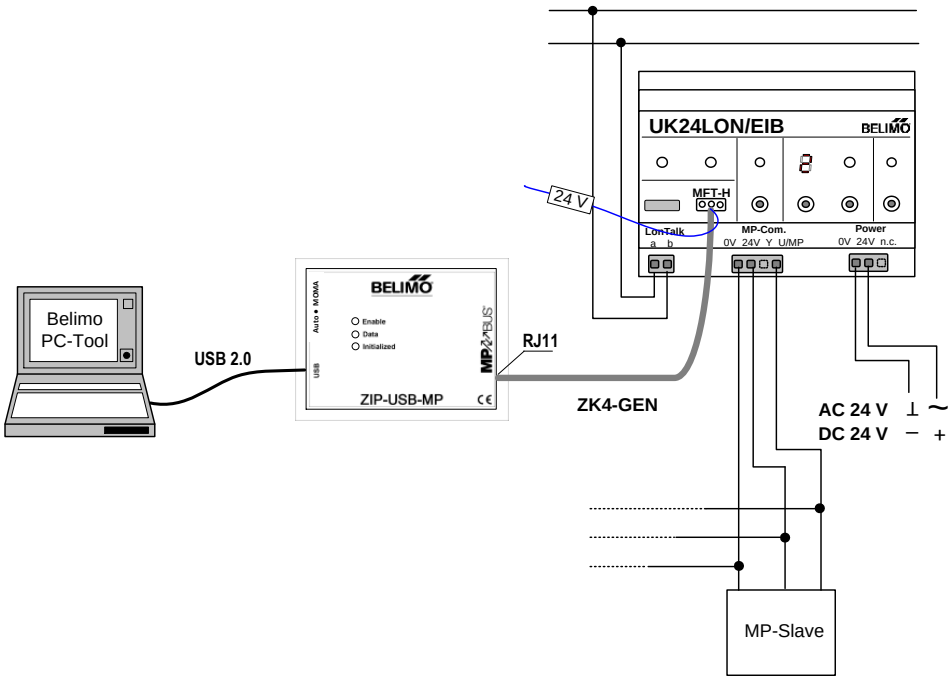

Connections / Anschluss ZIP-USB-MP

ZK4-GEN to VRP-M

ZK4-GEN to VRP-M

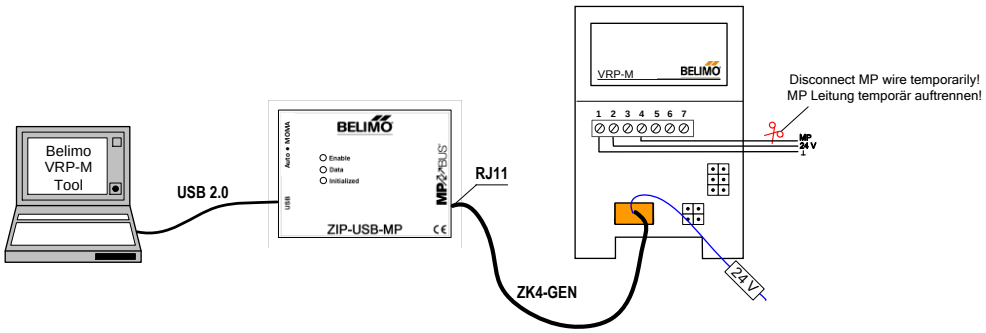

ZK4-GEN to BKN230-24MP

ZK4-GEN to BKN230-24MP

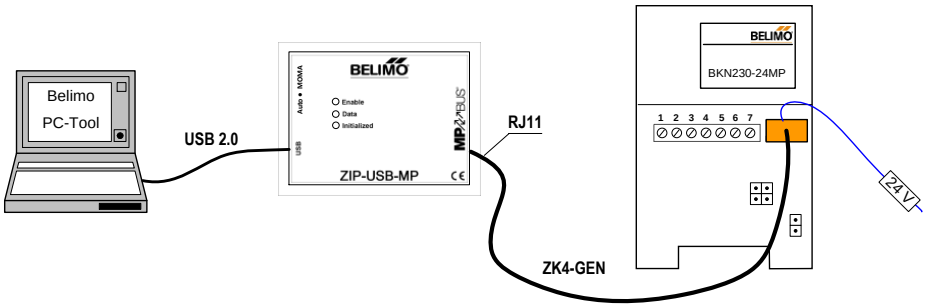

via ZK1-VAV to NMV-D2M

via ZK1-VAV an NMV-D2M

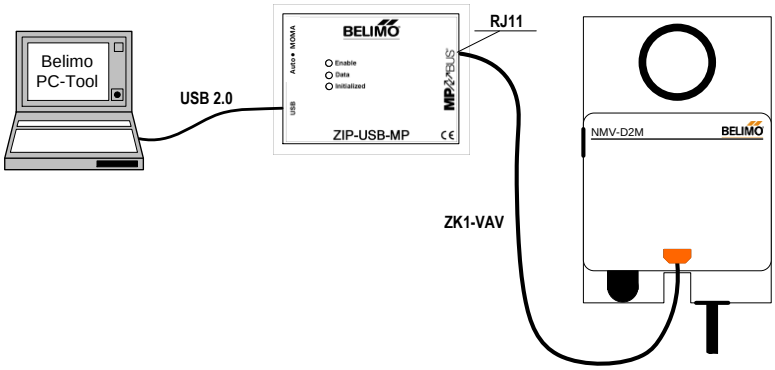

Connection / Anschluss ZTH EU / ZTH-GEN

via ZK1-VAV to CR24

via ZK1-VAV an CR24

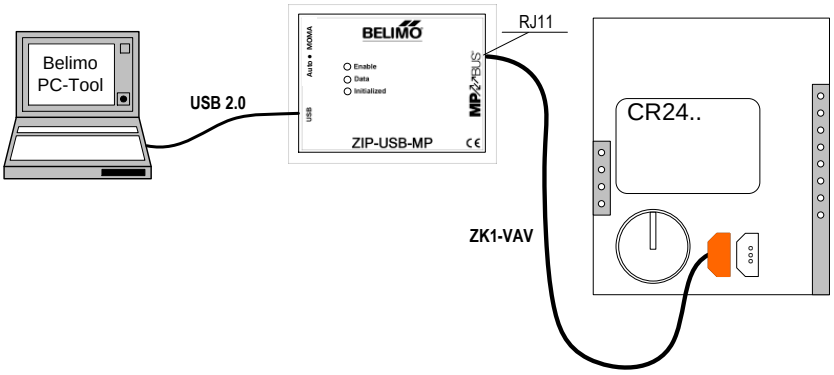

via ZK1-GEN to NG actuator

via ZK1-GEN an NG Antrieb

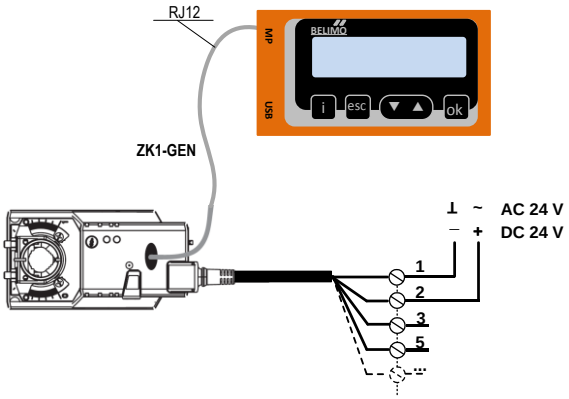

*Connection ZTH-GEN similar to ZTH EU

Anschluss ZTH-GEN gleich wie ZTH EU

via ZK2-GEN to junction box

via ZK2-GEN an Anschlussdose

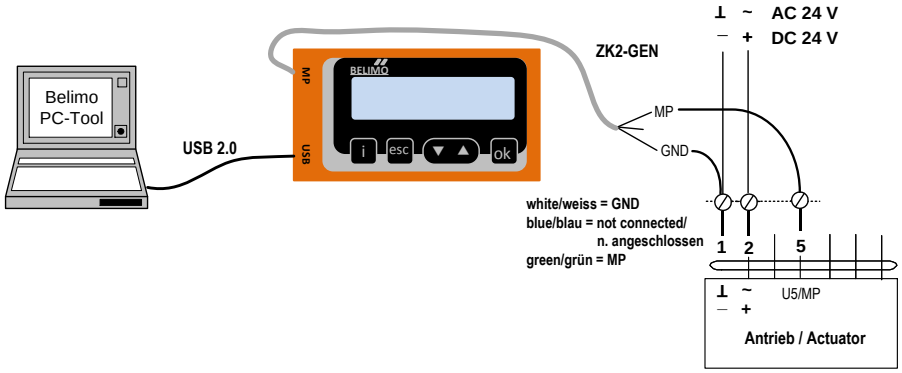

Connection / Anschluss ZTH EU / ZTH-GEN

via ZK4-GEN to VRP-M

via ZK4-GEN an VRP-M

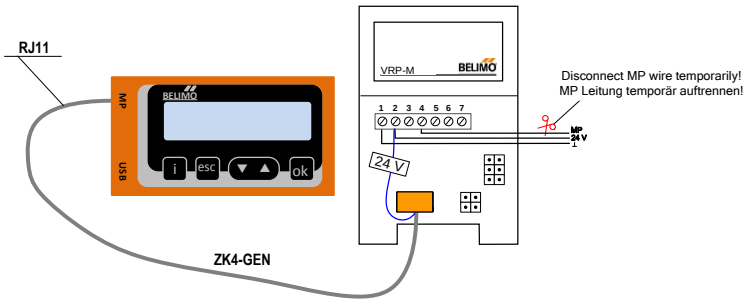

*Connection ZTH-GEN similar to ZTH EU

Anschluss ZTH-GEN gleich wie ZTH EU

via ZK4-GEN to BKN230-24MP

via ZK4-GEN an BKN230-24MP

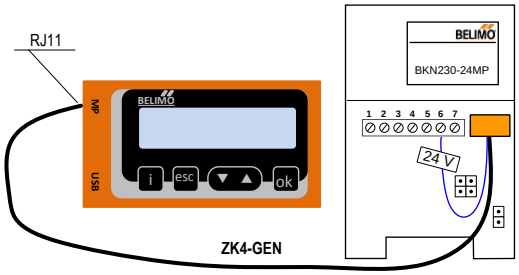

via ZK6-GEN to VRD3

via ZK6-GEN an VRD3

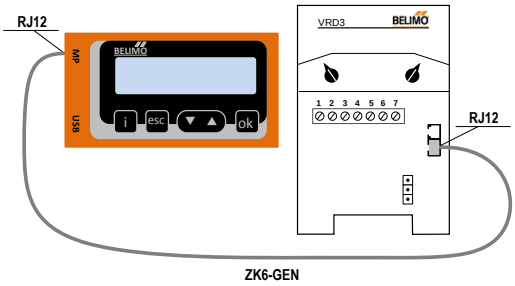

*Connection ZTH-GEN similar to ZTH EU

Anschluss ZTH-GEN gleich wie ZTH EU

Connection / Anschluss ZTH EU / ZTH-GEN

via ZK1-VAV to NMV-D2M

via ZK1-VAV an NMV-D2M

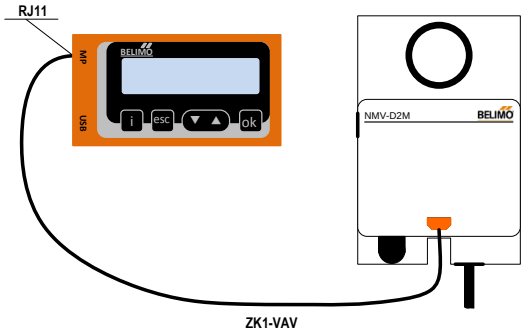

*Connection ZTH-GEN similar to ZTH EU

Anschluss ZTH-GEN gleich wie ZTH EU

via ZK1-VAV to CR24

via ZK1-VAV an CR24

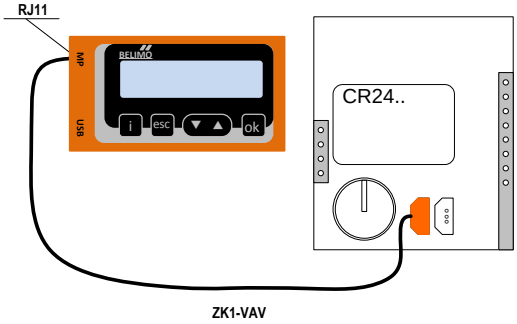

*Connection ZTH-GEN similar to ZTH EU

Anschluss ZTH-GEN gleich wie ZTH EU

Direktanschluss / Direct connection MFT-C

Connection ZTH EU ZIP function

Anschluss ZTH EU ZIP Funktion

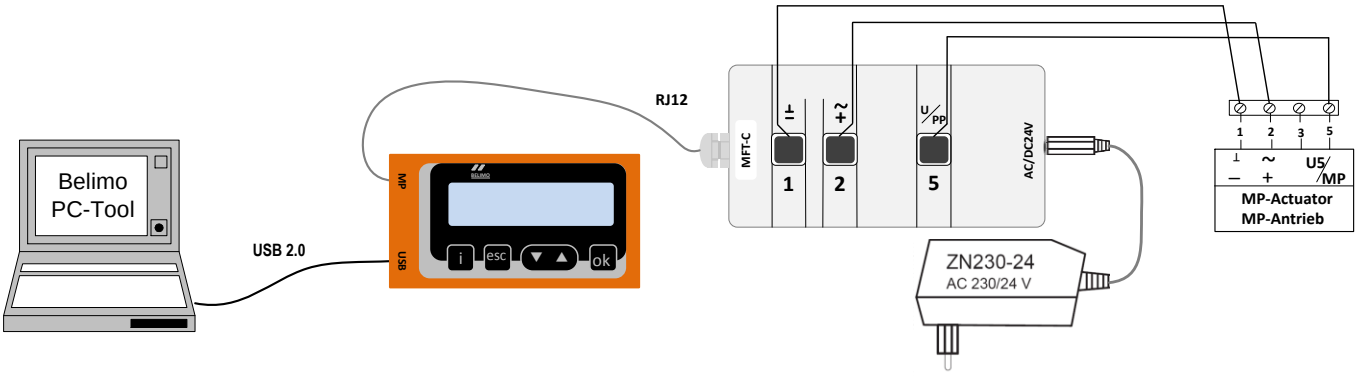

Connection ZIP-USB-MP

Anschluss ZIP-USB-MP

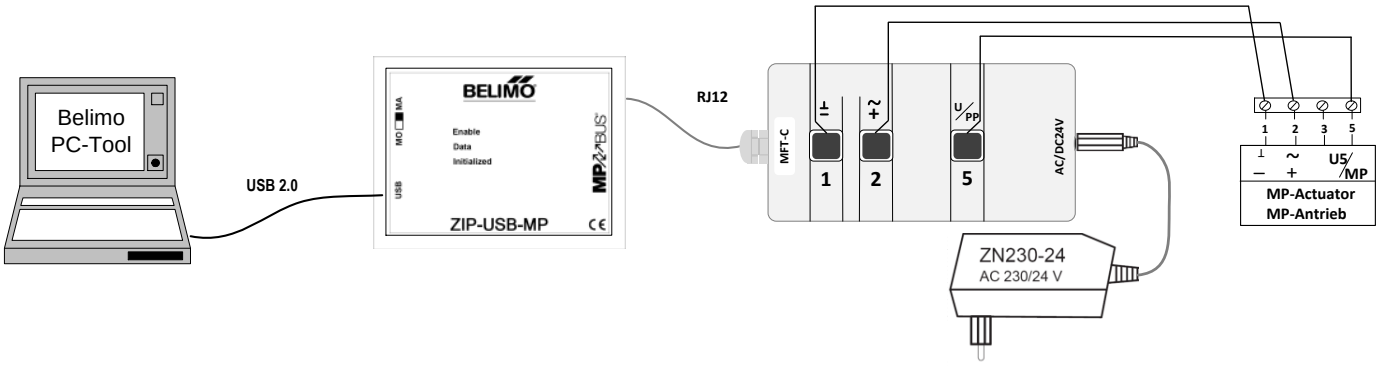

MP-Bus Tester (ZTH EU)

with ZK2-GEN

mit ZK2-GEN

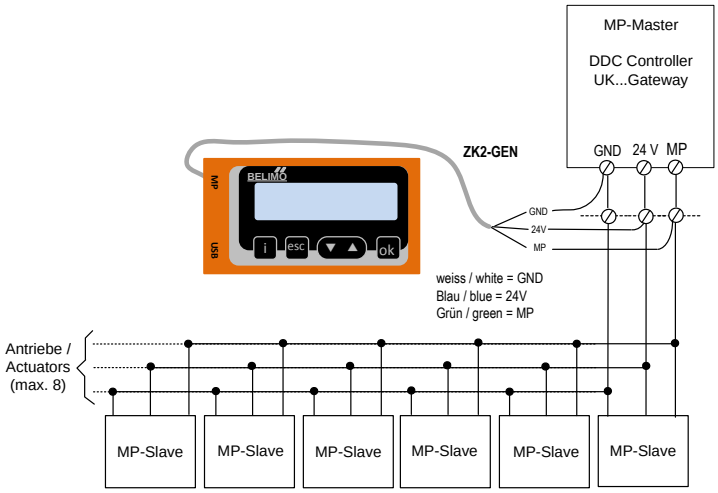

with ZK4-GEN

mit ZK4-GEN

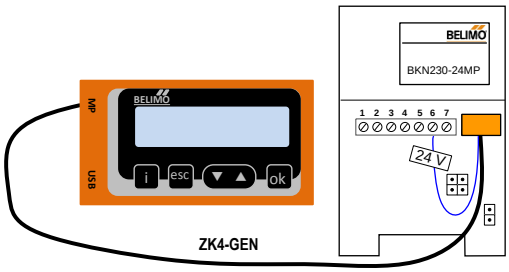

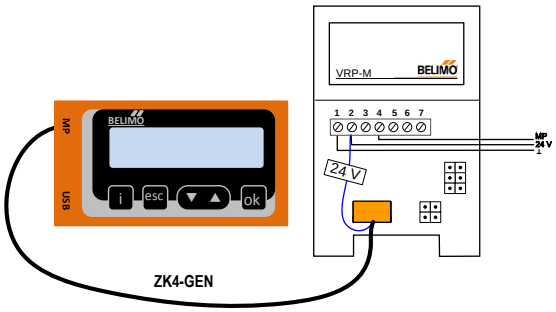

MP-Bus Tester (ZTH EU)

with ZK6-GEN

mit ZK6-GEN

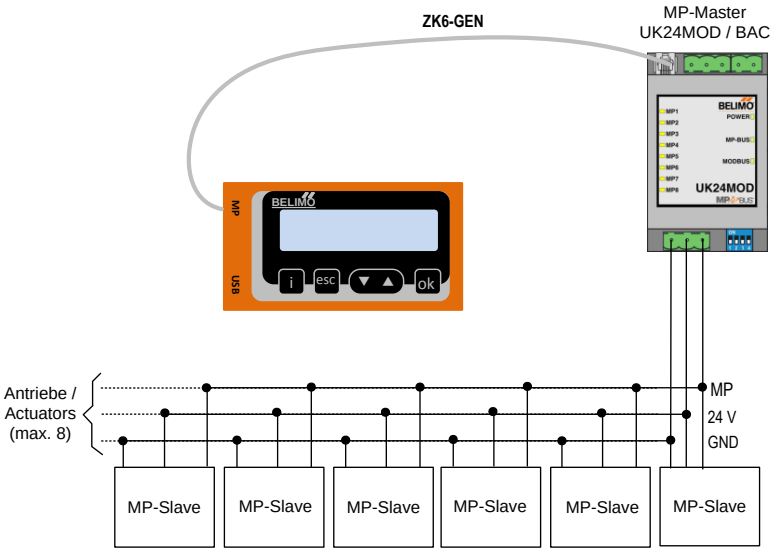

All-inclusive.

- 5-year warranty
- On site around the globe
- A complete range of products from one source
- Tested quality
- Short delivery times
- Comprehensive support

Headquarters

BELIMO Holding AG
Brunnenbachstrasse 1
CH-8340 Hinwil
Tel. +41 43 843 61 11
Fax +41 43 843 62 68
info@belimo.ch
www.belimo.com

Subsidiaries, Representatives and Agencies

Albania
Algeria
Argentina
Australia
Austria
Bahrain
Belarus
Belgium
Bosnia
Brazil
Bulgaria
Cameroon
Canada
Central America
Chile
China
Croatia
Cyprus
Czech Republic
Denmark
Egypt
Estonia
Finland
France
Georgia
Germany
Greece
Great Britain
Hong Kong
Hungary
Iceland
India
Indonesia
Ireland
Israel
Italy
Japan
Jordan
Kazakhstan
Korea
Kuwait
Latvia
Lebanon
Libya
Lithuania
Luxembourg
Macedonia
Malaysia
Malta
Mexico
Moldova
Montenegro
Morocco
Netherlands
New Zealand
Norway
Oman
Pakistan
Philippines
Poland
Portugal
Qatar
Romania
Russia
Saudi Arabia
Serbia
Singapore
Slovakia
Slovenia
South Africa
Spain
Sri Lanka
Sweden
Switzerland
Taiwan
Thailand
Tunisia
Turkey
United Arab Emirates
Ukraine
United States of America
Vietnam

Belimo worldwide: www.belimo.com

BELIMO®