Contact temperature sensor

Active contact temperature sensor (4...20 mA) for pipe applications. Spring loaded brass contact pin to ensure fast response and accurate reading.

5 YEAR WARRANTY

Type Overview

Type	Output signal active temperature
22HT-14	4...20 mA

Technical data

Electrical data	Nominal voltage	DC 24 V
	Nominal voltage range	DC 13.5...26.4 V
	Power consumption DC	0.5 W
	Electrical connection	Pluggable spring loaded terminal block max. 2.5 mm²
	Cable entry	Cable gland with strain relief ø6...8 mm
Functional data	Medium	Water
	Multirange	8 measuring ranges selectable
	Current output	1x 4...20 mA, max. resistance 500 Ω
Measuring data	Measured values	Temperature
Specification temperature active	Sensing element technology	Based on Pt1000 class AA
	Measuring range temperature settings	Active sensor: range selectable Attention: The maximum measuring range listed does not indicate the allowable fluid temperature for the sensor. Refer to safety data for the maximum fluid temperature limits.

Setting	Range [°C]	Range [°F]	Factory setting
S0	-50...50	-30...130	
S1	-10...120	0...250	
S2	0...50	40...140	
S3	0...250	30...480	
S4	-15...35	0...100	
S5	0...100	40...240	✔
S6	-20...80	40...90	
S7	0...160	0...150	

	Accuracy temperature	±0.5°C @ 21°C [±0.9°F @ 70°F] @ measuring range setting S2 and S4
	Long term stability	±0.04°C p.a. @ 21°C [±0.07°F p.a. @ 70°F]
	Time constant τ (63%) on water pipe	With thermal contact fluid Typical 16 s
Safety data	Protection class IEC/EN	III, Protective Extra-Low Voltage (PELV)

Technical data

Safety data	Power source UL	Class 2 Supply
	Degree of protection IEC/EN	IP54
	Degree of protection NEMA/UL	NEMA 1
	Housing	UL Enclosure Type 1
	EU Conformity	CE Marking
	Certification IEC/EN	IEC/EN 60730-1
	Quality Standard	ISO 9001
	UL Approval	cULus acc. to UL60730-1A/-2-9, CAN/CSA E60730-1/-2-9
	Pollution degree	2
	Ambient humidity	Max. 95% RH, non-condensing
	Ambient temperature	-35...50°C [-30...120°F]
	Fluid temperature	-35...70°C [-30...160°F]
	Housing surface temperature	Max. 70°C [160°F]
Materials	Housing	Cover: PC, orange Bottom: PC, orange Seal: NBR70, black UV resistant
	Cable gland	PA6, black

Safety notes

This device has been designed for use in stationary heating, ventilation and air-conditioning systems and must not be used outside the specified field of application. Unauthorised modifications are prohibited. The product must not be used in relation with any equipment that in case of a failure may threaten humans, animals or assets.

Ensure all power is disconnected before installing. Do not connect to live/operating equipment.

Only authorised specialists may carry out installation. All applicable legal or institutional installation regulations must be complied with during installation.

The device contains electrical and electronic components and must not be disposed of as household refuse. All locally valid regulations and requirements must be observed.

Remarks

General remarks concerning sensors

When using lengthy connection wires (depending on the cross section used) the measuring result might be falsified due to a voltage drop at the common GND-wire (caused by the voltage current and the line resistance). In this case, 2 GND-wires must be wired to the sensor - one for supply voltage and one for the measuring current.

Sensing devices with a transducer should always be operated in the middle of the measuring range to avoid deviations at the measuring end points. The ambient temperature of transducer electronics should be kept constant. The transducers must be operated at a constant supply voltage (±0.2 V). When switching the supply voltage on/off, onsite power surges must be avoided.

Remark: Occurring draft leads to a better carrying-off of dissipative power at the sensor. Thus temporally limited fluctuations might occur upon temperature measurement.

Remarks

Build-up of self-heating by electrical dissipative power

Temperature sensors with electronic components always have a dissipative power which affects the temperature measurement of the ambient air. The dissipation in active temperature sensors shows a linear increase with rising operating voltage. The dissipative power should be taken into account when measuring temperature.

In case of a fixed operating voltage (±0.2 V), this is normally done by adding or reducing a constant offset value. As Belimo transducers work with a variable operating voltage, for reasons of production engineering only one operating voltage can be taken into consideration. Transducers 0...10 V / 4...20 mA have a standard setting at an operating voltage of DC 24 V. This means that at this voltage, the expected measuring error of the output signal will be the least. For other operating voltages, the offset error will be increased by a changing power loss of the sensor electronics.

If a readjustment directly at the active sensor should be necessary during later operation, this can be done with the following adjustment methods.

- For sensors with NFC or dongle with the corresponding Belimo app
- For sensors with a trimming potentiometer on the sensor board
- For bus sensors via bus interface with a corresponding software variable

Remark surface measurements

When measuring temperature, humidity or condensation on a surface, both the temperature of the surface and that of the ambient air influence the measurement result. When measuring on a pipe surface, the influence of the ambient air can be minimised by using thermal contact fluid.

Parts included

Description	Type
Fixing strap, for pipes ø20...110 mm [0.8...4.3"]	A-22P-A47

Accessories

Optional accessories

Description	Type
Fixing strap, for pipes ø20...250 mm [0.8...9.8"]	A-22P-A49
Thermal contact fluid	A-22P-A44
Connection adapter flex conduit, M20x1.5, for cable gland 1x 6 mm, Multipack 10 pcs.	A-22G-A01.1

Wiring diagram

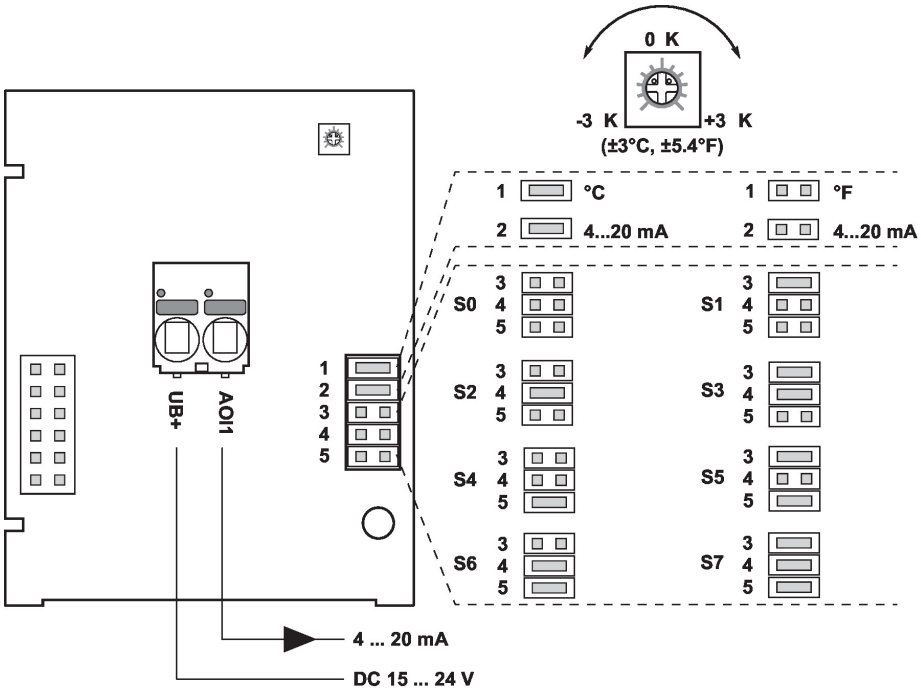

The following measuring ranges can be adjusted through the jumper settings:

Setting	Range [°C]	Range [°F]	Factory setting
S0	-50...50	-30...130	
S1	-10...120	0...250	
S2	0...50	40...140	
S3	0...250	30...480	
S4	-15...35	0...100	
S5	0...100	40...240	✔
S6	-20...80	40...90	
S7	0...160	0...150	

Dimensions

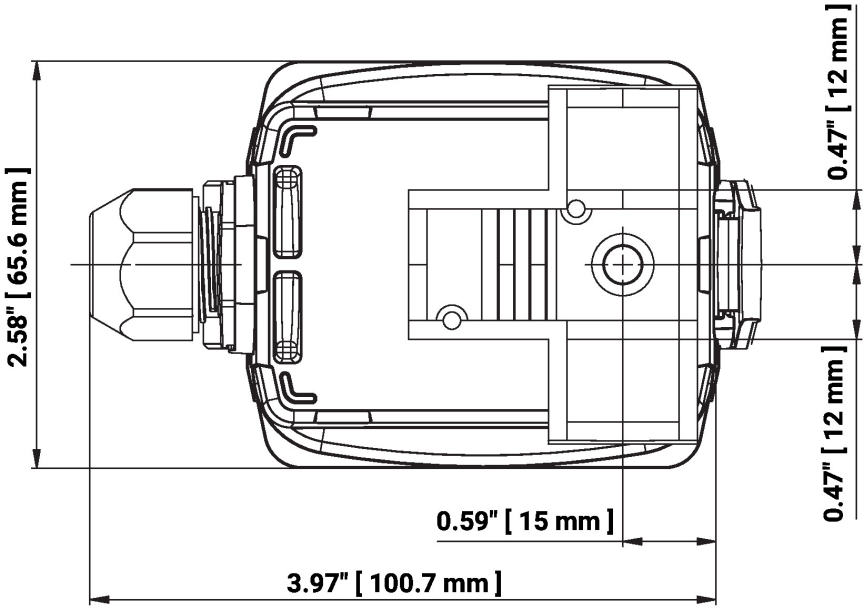

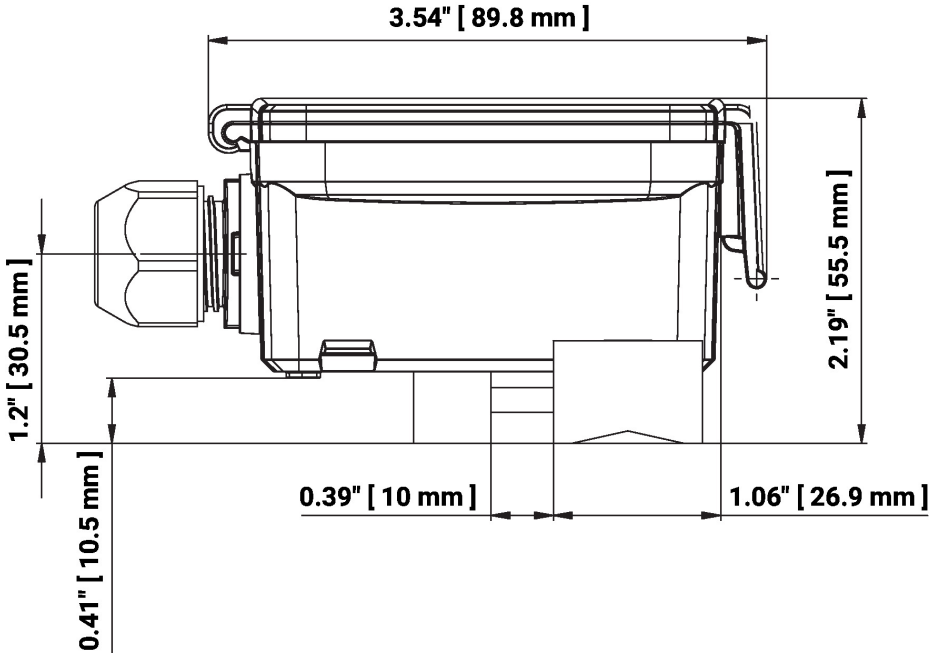

Type	Weight
22HT-14	0.15 kg

Further documentation

- Installation instructions