Thermal energy meter

Thermal energy meter for measuring energy in a closed heating or cooling circuit. It is equipped with automatic glycol compensation and automatically and continuously measures the glycol content in the medium and compensates it, thus ensuring reliable measurement of the thermal energy. If required, the power supply can be provided via PoE (Power over Ethernet). Communication is provided via BACnet, Modbus, MP-Bus or M-Bus (with Converter). Configuration is done with Belimo Assistant 2 or via web server. The commissioning report can be generated automatically. Connection to the Belimo Cloud is possible.

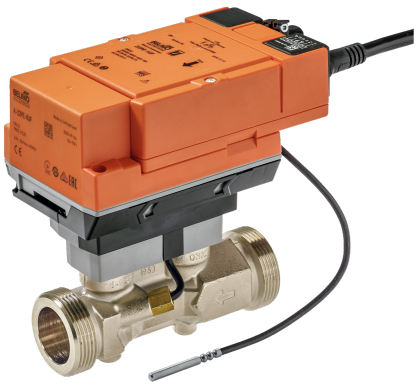

Type Overview

Type	DN	G ["]	qp [m³/h]	qs [m³/h]	qi [m³/h]	Kvs theor. [m³/h]	Δp [kPa]	Q'max [kW]	PN
22PE-1UC	15	3/4	1.5	3	0.015	3.9	15	350	25
22PE-1UD	20	1	2.5	5	0.025	7.2	12	585	25
22PE-1UE	25	1 1/4	3.5	7	0.035	13.2	7	815	25
22PE-1UF	32	1 1/2	6	12	0.06	16.0	14	1400	25
22PE-1UG	40	2	10	20	0.1	23.6	18	2330	25
22PE-1UH	50	2 1/2	15	30	0.15	32.0	22	3500	25

qp: Nominal flow

qs: Highest flow

qi: Lowest flow

Kvs theor.: theoretical Kvs value for pressure drop calculation

Δp: Pressure drop at nominal flow qp

Q'max: Maximum thermal output (q = qs, ΔΘ = 100 K)

Structure

Components

The thermal energy meter consists of a sensor module with connected temperature sensors, which houses the calculator unit and measuring system, and the logic module, which connects the thermal energy meter to the power supply and provides the bus and NFC communication interface. The sensor module is available as a spare part.

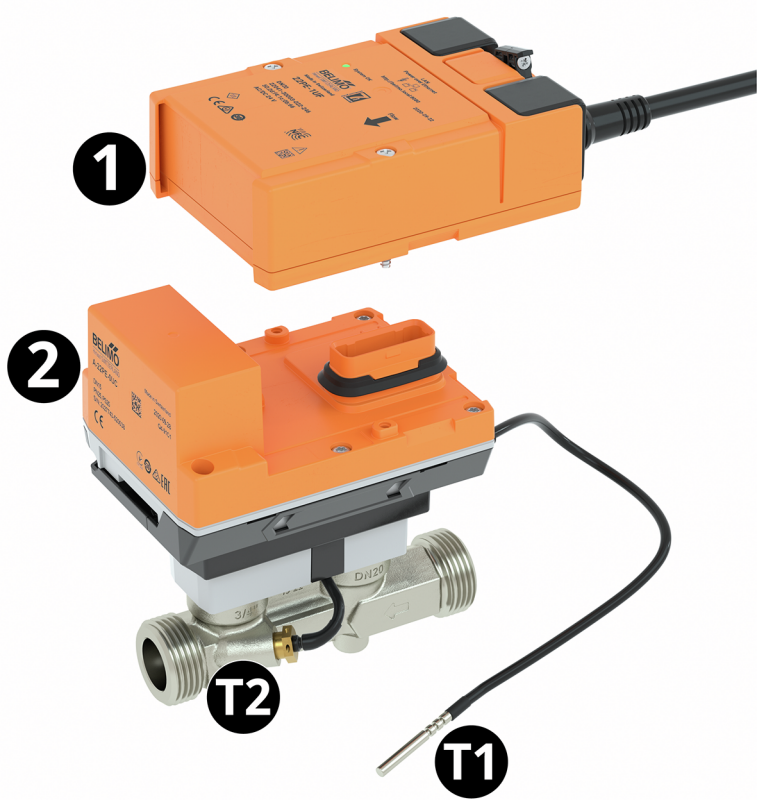

External temperature sensor T1
Integrated temperature sensor T2
Logic module 1
Sensor module 2

Technical data

Electrical data	Nominal voltage	AC/DC 24 V
	Nominal voltage frequency	50/60 Hz
	Nominal voltage range	AC 19.2...28.8 V / DC 21.6...28.8 V
	Power consumption AC	3 VA
	Power consumption DC	1.5 W
	Power consumption PoE	2.2 W
	Connection supply	Cable 1 m, 6x 0.75 mm²
	Connection Ethernet	RJ45 socket
	Power over Ethernet PoE	DC 37...57 V IEEE 802.3af/at, Type 1, Class 3 11 W (PD13W)
	Conductors, cables	Power supply AC/DC 24 V: cable length <100 m, no shielding or twisting required Power supply PoE: shielded cables recommended
	Annual energy consumption	With external energy supply 13.2 kWh
Data bus communication	Communication	BACnet/IP BACnet MS/TP Modbus TCP Modbus RTU MP-Bus Cloud
	Communication note	M-Bus via Converter G-22PEM-A01
	Number of nodes	BACnet / Modbus see interface description MP-Bus max. 8 (16)

Technical data

Functional data	Medium	Water Water-glycol mixture
	Configuration	via Belimo Assistant 2 via integrated web server
	Voltage output	1 x 0...10 V, 0.5...10 V, 2...10 V
	Pipe connection	External thread according to ISO 228-1
	Servicing	maintenance-free
Measuring data	Measured values	Flow Temperature
	Measuring fluid	Water, water with glycol up to max. 60% vol.
	Measuring principle	Ultrasonic flow measurement
Specification Flow	Dynamic range qi:qp	1:100
	Measuring accuracy flow	±2%, according to class 2 EN 1434, glycol 0% vol.
	Measuring accuracy flow note	@ 15...120°C Inlet section ≥0x DN (EN 1434-4:2022) Additional information on measuring accuracy (with diagram) can be found in the section "Measuring accuracy".
Glycol monitoring	Measurement display glycol	0...60%
	Measuring accuracy glycol monitoring	±4%
Specification temperature passive	Temperature sensor	Pt1000 - EN 60751, 2-wire technology, inseparably connected Cable length external sensor T1: 3 m
	Measuring accuracy absolute temperature	Temperature probe (probe only – individually compensated): ±(0.1 + 0.0017 |T|)°C (corresponds to Pt1000 EN60751 Class AA) Calculator + temperature probe: ±(0.15 + 0.002 |T|)°C
	Measuring accuracy differential temperature	Calculator + temperature probe: ±0.17K @ ΔT = 5K ±0.22 K @ ΔT = 10 K ±0.32 K @ ΔT = 20 K
Safety data	Protection class IEC/EN	III, Protective Extra-Low Voltage (PELV)
	Degree of protection IEC/EN	IP54 Logic module: IP54 (with grommet A-22PEM-A04) Sensor module: IP65
	EU Conformity	CE Marking
	Certification IEC/EN	IEC/EN 60730-1:11 and IEC/EN 60730-2-15:10
	Quality Standard	ISO 9001
	Type of action	Type 1
	Rated impulse voltage supply	0.8 kV
	Pollution degree	3
	Ambient humidity	Max. 95% RH, non-condensing
	Ambient temperature	-30...55°C [-22...131°F]
	Fluid temperature	-20...120°C [-4...248°F]
	Fluid temperature note	At a fluid temperature of <2°C [<36°F], frost protection must be guaranteed
	Storage temperature	-40...80°C [-40...176°F]

Technical data

Materials

Cable	PVC
Fluid wetted parts	Brass nickel-plated, Brass, Stainless steel, PEEK, EPDM

Safety notes

This device has been designed for use in stationary heating, ventilation and air-conditioning systems and must not be used outside the specified field of application, especially in aircraft or in any other airborne means of transport.

Outdoor application: Only possible if no (sea) water, snow, ice, sunlight or aggressive gases act directly on the device and if it is ensured that the ambient conditions remain within the limit values specified in the data sheet at all times.

Only authorised specialists may carry out installation. All applicable legal or institutional installation regulations must be complied with during installation.

The device contains electrical and electronic components and must not be disposed of as household refuse. All locally valid regulations and requirements must be observed.

Product Features

Operating mode

The thermal energy meter consists of a volume measuring part, evaluation electronics and two temperature sensors. One temperature sensor is integrated in flow sensor, the other temperature sensor is installed as an external sensor. The device determines the thermal energy supplied to consumers via a heating circuit or extracted from a heat exchanger via a cooling circuit from the volumetric flow and the temperature difference between supply and return flow.

The thermal energy meter is designed as a multifunctional device and can be used as a heat meter, cooling meter or heat/cooling meter. In addition, it can be installed either in the return or in the supply of the system. The installation in the return or in the supply is selected during commissioning with a smartphone and Belimo Assistant 2.

Calibration certificate

A calibration certificate is available in the Belimo Cloud for each thermal energy meter. If required, this can be downloaded as a PDF with Belimo Assistant 2 or via the Belimo Cloud frontend.

Flow measurement

The thermal energy meter measures the current flow rate every 0.1 s in mains operation.

Power calculation

The thermal energy meter calculates the current thermal power based on the current flow rate and the measured temperature difference.

Invoicing energy consumption

The energy consumption data can be read out as follows:

- Bus
- Cloud API
- Belimo Cloud Account of the device owner
- Belimo Assistant 2
- Integrated web server

Belimo cloud

The "Terms of Use for Belimo Cloud Services" in their currently valid version apply to the use of cloud services.

Note: The connection to the Belimo Cloud is permanently available. Activation takes place via web server or Belimo Assistant 2.

PoE (Power over Ethernet)

If necessary, the thermal energy meter can be supplied with power via the Ethernet cable. The PoE-powered thermal energy meter can supply power to an external device (e. g. actuator or active sensor). This function can be activated via Belimo Assistant 2. DC 24 V (max. 8 W) is then available on wires 1 and 2.

Caution: PoE may only be enabled if an external device is connected to wires 1 and 2 or wires 1 and 2 are insulated!

Product Features

Commissioning report

Once commissioning has been completed, a commissioning report is available via the web server or Belimo Assistant 2, in which all settings and basic data are presented in a clear and structured manner. The commissioning report can be saved as a PDF file.

Spare parts

Sensor module of the thermal energy meter consisting of:

- 1 x sensor module including integrated temperature sensor T2 and external temperature sensor T1

Patented glycol compensation

Glycol changes the viscosity of the heat transfer fluid and as a result affects the measured volumetric flow. Without glycol compensation, volumetric flow measurements can show errors of as much as 30 percent. The patented automatic glycol compensation significantly reduces the degree of measurement error.

Selection of the fluid used:

– Water

– Propylene glycol

– Ethylene glycol

– Antifrogen L

– Antifrogen N

– DowCal 200

– DowCal 100

Determining the glycol concentration requires recurring temperature changes of min. 2 K within the flow sensor during operation. Installing the flow sensor in the temperature-variable part of the system is recommended to ensure these temperature changes.

Product Features

Pressure drop

The pressure drop across the thermal energy meter to achieve a desired flow q can be calculated using the theoretical Kvs value (see type overview) and the formula below.

Formula pressure drop

$$\Delta p = \left(\frac{q}{k_{vs}theor.}\right)^2 * 100\ kPa$$

Δp: kPa
q: m³/h
Kvstheor.: m³/h

Example pressure drop calculation

22PE-1UE (DN 25)

Kvstheor. = 13.2 m³/h
qp = 3.5 m³/h
q = 1.7 m³/h

$$\Delta p = \left(\frac{q}{k_{vs}theor.}\right)^2 * 100\ kPa = \left(\frac{1.7\ m^3/h}{13.2\ m^3/h}\right)^2 * 100\ kPa = 1.66\ kPa$$

Pressure drop diagram

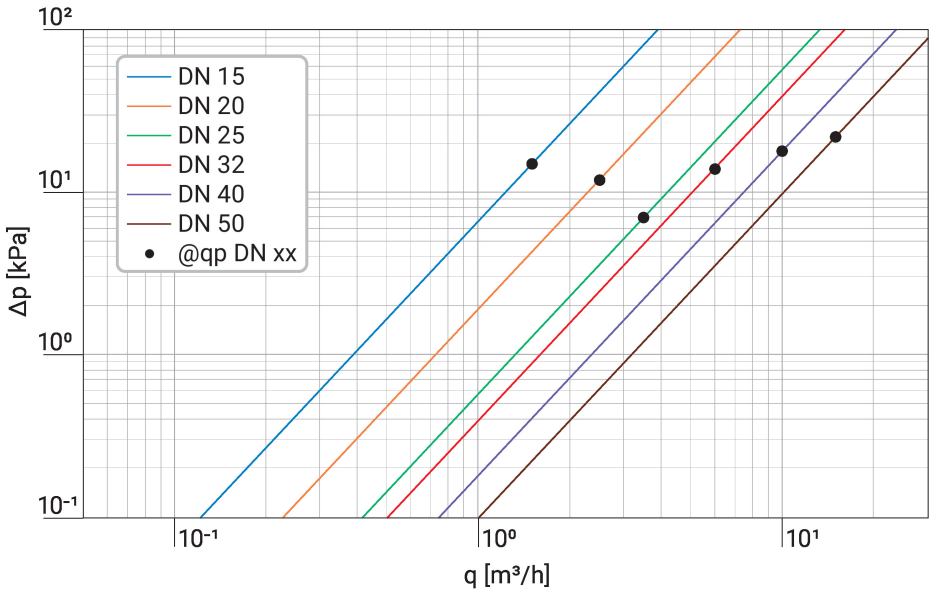

Δp = Pressure drop
q = Measured flow

Product Features

Measuring accuracy

Measuring accuracy for water (glycol 0% vol.):

±(2 + 0.02 qp/q)% of the measured value (q), but not more than ±5%

At a temperature range of 15...120 °C.

Measuring accuracy for water + glycol (glycol 0...60% vol.)

±5% (@ 20...100% qp)

±0.01 qp, but not more than 30% of q (@ qi...20% qp)

At a temperature range of -20...120°C.

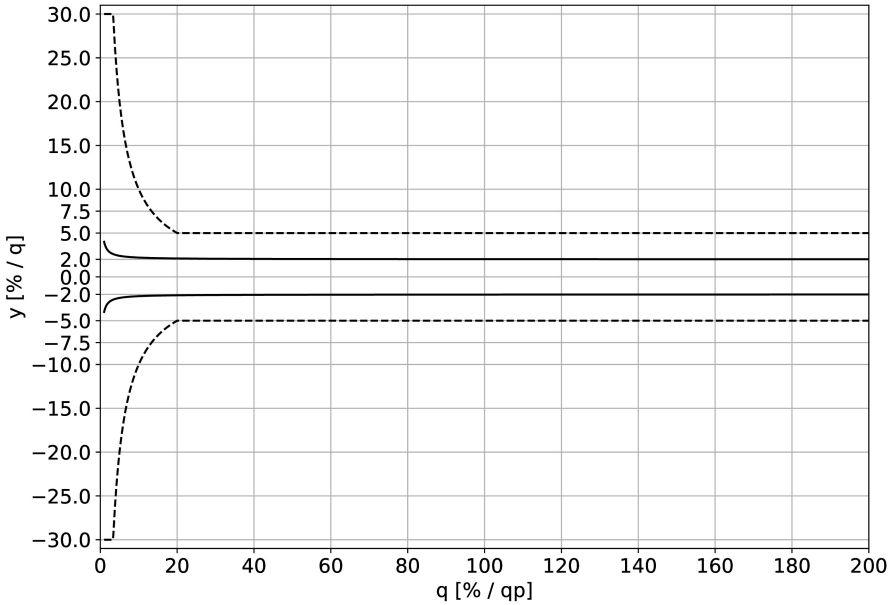

— Water
---- Water + Glycol (≤60% Glycol)
y = Measuring accuracy
q = Measured flow
qp = Nominal flow

Operation

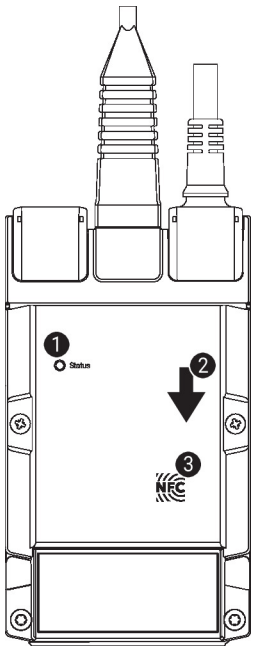

1. **LED display green**

On:	Device starting up
Flashing:	In operation (Power ok)
Off:	No power

2. **Flow direction**
3. **NFC interface**

Installation notes

Permissible installation orientation

The sensor can be installed upright to horizontal. The sensor may not be installed in a hanging position.

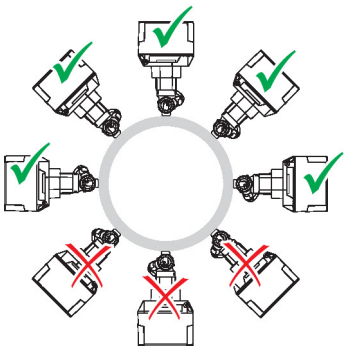

Installation in return

Installation in the return is recommended.

Dimensioning

The thermal energy meter is dimensioned to the nominal flow (qp).

The flow rate may increase to the highest flow (qs) for a short time (<1h/day).

Inlet section

A flow calming section or inlet section in the direction of the flow must be maintained in front of the flow sensor to achieve the specified measuring accuracy.

According to EN 1434-4:2022 (out-of-plane double 90° bends), an inlet section of 0x DN is applicable. In all other cases, EN 1434-6:2022, Annex A.4, recommends an inlet section of ≥5x DN. See also the Belimo application information on the inlet section according to EN 1434.

a) Recommended installation locations

b) Prohibited installation location due to the danger of air accumulation

c) Installation immediately after valves is prohibited. Exception: If it is a shut-off valve without constriction and it is 100% open

d) Installation on the suction side of a pump is not recommended

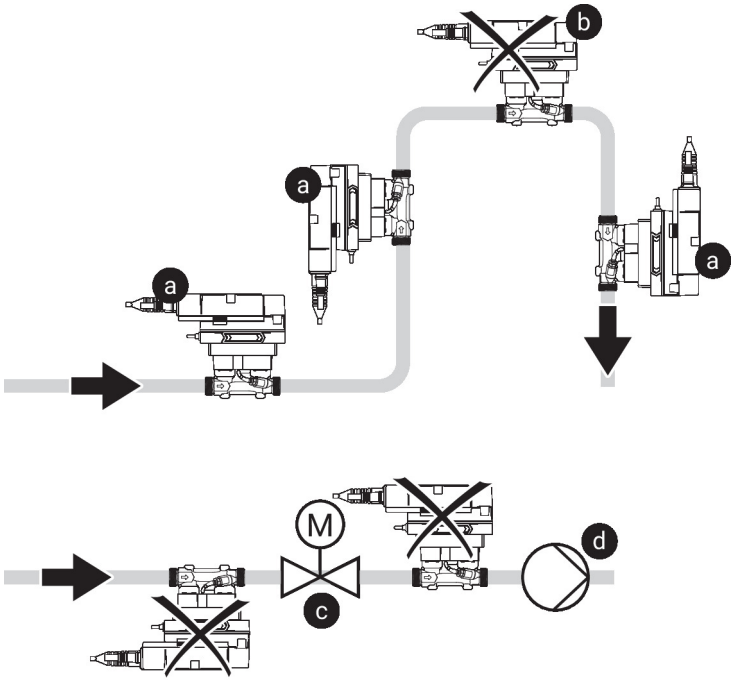

Water quality requirements

The water quality requirements specified in VDI 2035 must be adhered to.

Installation notes

Servicing

Thermal energy meter are maintenance-free.

Before any service work on the thermal energy meter is carried out, it is essential to isolate the thermal energy meter from the power supply (by unplugging the electrical cables if necessary). Any pumps in the part of the piping system concerned must also be switched off and the appropriate slide valves closed (allow all components to cool down first if necessary and always reduce the system pressure to ambient pressure level).

The system must not be returned to service until the thermal energy meter has been correctly reassembled in accordance with the instructions and the pipeline has been refilled by professionally trained personnel.

Flow direction

The direction of flow, specified by an arrow on the housing, is to be complied with, since otherwise the flow rate will be measured incorrectly.

Avoiding cavitation

To avoid cavitation, the system pressure at the outlet of the thermal energy meter must be a minimum of 1.0 bar at qs (highest flow) and temperatures up to 90°C.

At a temperature of 120°C the system pressure at the outlet of the thermal energy meter must be at least 2.5 bar.

Cleaning of pipes

Before installing the thermal energy meter, the circuit must be thoroughly rinsed to remove impurities.

Prevention of stresses

The thermal energy meter must not be subjected to excessive stress caused by pipes or fittings.

Parts included

Description	Type
Grommet for RJ connection module with clamp	A-22PEM-A04
Thermowell Stainless steel, 50 mm, G 1/4", SW17	A-22PE-A07
Insulation shell for thermal energy meter DN 15...25	A-22PEM-A01
Insulation shell for thermal energy meter DN 32...50	A-22PEM-A02

Insulation shell not included in Asia Pacific

Accessories

Replacement sensor modules

Description	Type
Sensor module thermal energy meter DN 15	R-22PE-0UC
Sensor module thermal energy meter DN 20	R-22PE-0UD
Sensor module thermal energy meter DN 25	R-22PE-0UE
Sensor module thermal energy meter DN 32	R-22PE-0UF
Sensor module thermal energy meter DN 40	R-22PE-0UG
Sensor module thermal energy meter DN 50	R-22PE-0UH

Optional accessories

Description	Type
Converter M-Bus	G-22PEM-A01
Thermowell Stainless steel, 80 mm, G 1/2", SW27	A-22PE-A08
Insulation shell for thermal energy meter DN 15...25	A-22PEM-A01
T-piece with thermowell DN 15	A-22PE-A01
Pipe connector for EPIV / Energy valve with external thread DN 15 Rp 1/2", G 3/4"	ZREV15F
T-piece with thermowell DN 20	A-22PE-A02
Pipe connector for EPIV / Energy valve with external thread DN 20 Rp 3/4", G 1"	ZREV20F
T-piece with thermowell DN 25	A-22PE-A03
Pipe connector for EPIV / Energy valve with external thread DN 25 Rp 1", G 1 1/4"	ZREV25F
Insulation shell for thermal energy meter DN 32...50	A-22PEM-A02
T-piece with thermowell DN 32	A-22PE-A04
Pipe connector for EPIV / Energy valve with external thread DN 32 Rp 1 1/4", G 1 1/2"	ZREV32F
T-piece with thermowell DN 40	A-22PE-A05

Accessories

	Description	Type
	Pipe connector for EPIV / Energy valve with external thread DN 40 Rp 1 1/2", G 2"	ZREV40F
	T-piece with thermowell DN 50	A-22PE-A06
	Pipe connector for EPIV / Energy valve with external thread DN 50 Rp 2", G 2 1/2"	ZREV50F
Tools	**Description**	**Type**
	Service tool for wired and wireless setup, on-site operation and troubleshooting.	Belimo Assistant 2
	Belimo Assistant Link Bluetooth and USB to NFC and MP-Bus converter for configurable and communicative devices	LINK.10
	Connecting cable 5 m, A: RJ11 6/4 LINK.10, B: free wire end for connection to MP/PP terminal	ZK2-GEN

Service

Using Belimo Assistant 2, device parameters can be modified. Belimo Assistant 2 can operate on a smartphone, tablet or PC. The available connection options vary depending on the hardware on which Belimo Assistant 2 is installed.

For more information about Belimo Assistant 2, refer to the Quick Guide – Belimo Assistant 2.

Service

Wireless connection

Belimo devices marked with the NFC logo can be accessed either directly with an NFC-capable smartphone or with a Bluetooth-capable smartphone connected to Belimo Assistant Link.

Requirement:

- NFC- or Bluetooth-capable smartphone or tablet
- Belimo Assistant 2 (Google Play and Apple App Store)

Align the NFC-capable smartphone or Belimo Assistant Link with the device's NFC logo so that both NFC antennas are superposed.

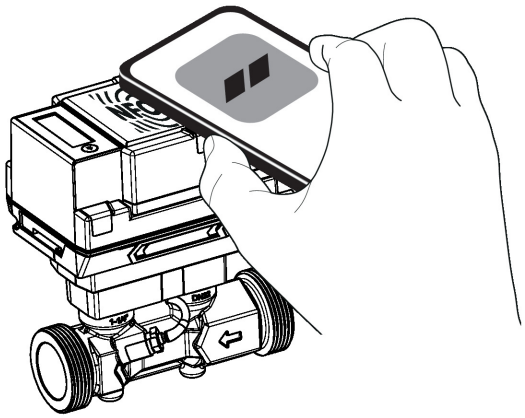

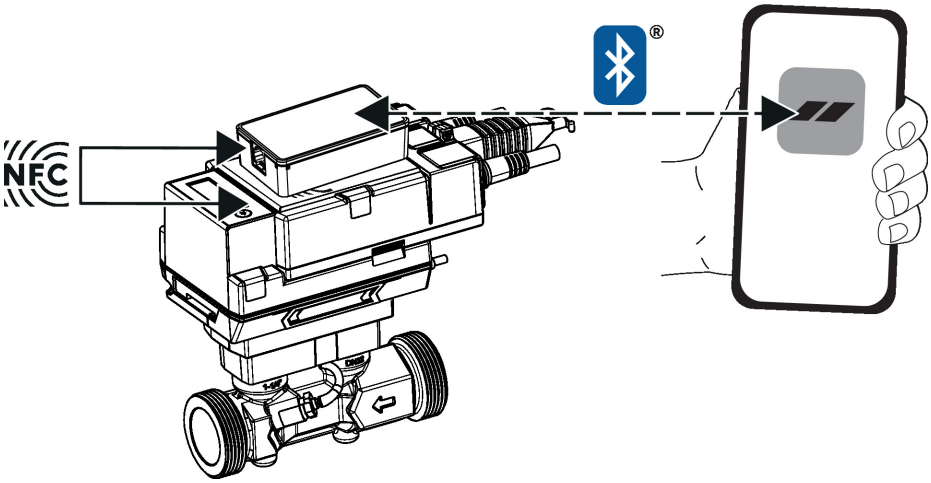

Service

Wired connection

Belimo devices can be accessed by connecting Belimo Assistant Link to the USB port on a PC or laptop and to the service socket or MP-Bus wire on the device.

Belimo Assistant 2 acts as MP client. Therefore, no other MP client shall be connected to the device.

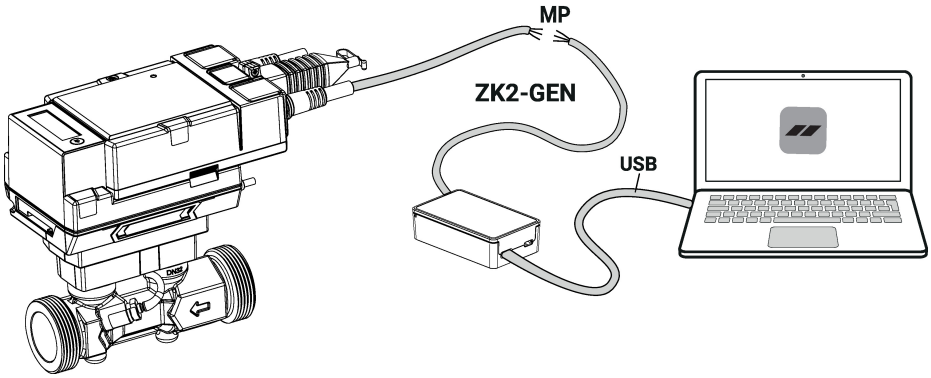

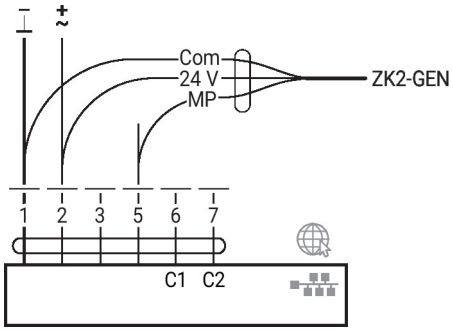

Wiring diagram

Supply from isolating transformer.

The wiring of the line for BACnet MS/TP / Modbus RTU is to be carried out in accordance with applicable RS-485 regulations.

Modbus / BACnet: Supply and communication are not galvanically isolated. COM and ground of the devices must be connected to each other.

Sensor connection: An additional sensor can optionally be connected to the thermal energy meter. This can be a passive resistance sensor Pt1000, Ni1000, NTC10k (10k2), an active sensor with output DC 0...10 V or a switching contact. Thus the analogue signal of the sensor can be easily digitised with the thermal energy meter and transferred to the corresponding bus system.

Analogue output: An analogue output (wire 5) is available on the thermal energy meter. It can be selected as DC 0...10 V, DC 0.5...10 V or DC 2...10 V. For example, the flow rate or the temperature of the temperature sensor T1/T2 can be output as an analogue value.

Wire colours:
1 = black
2 = red
3 = white
5 = orange
6 = pink
7 = grey

Functions:
1 = Com
2 = AC/DC 24 V
3 = Sensor (optional)
5 = 0...10 V, MP-Bus
C1 = D- (wire 6)
C2 = D+ (wire 7)

Wiring diagram

AC/DC 24 V, output signal

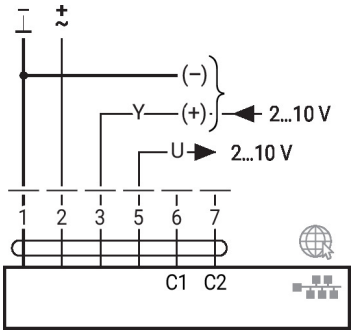

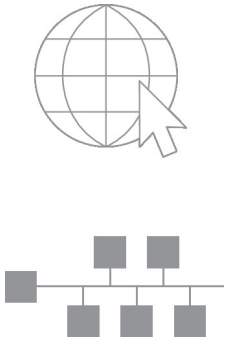

Optional connection via RJ45 (direct connection to notebook / connection via Intranet or Internet) for access to the integrated web server

BACnet MS/TP / Modbus RTU

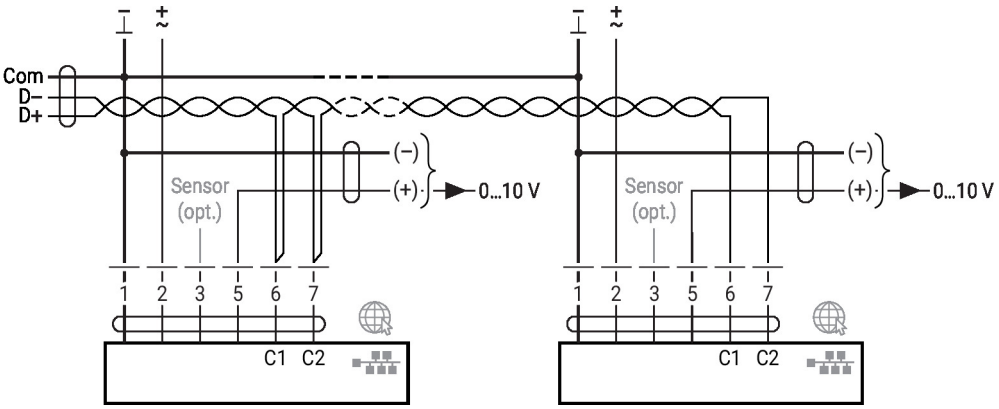

BACnet/IP / Modbus TCP

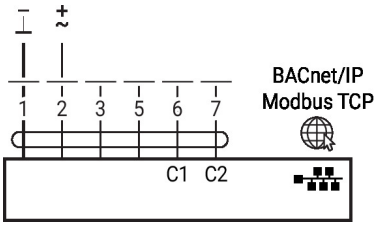

PoE with BACnet/IP / Modbus TCP

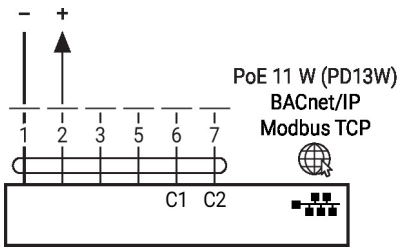

MP-Bus, supply via 3-wire connection

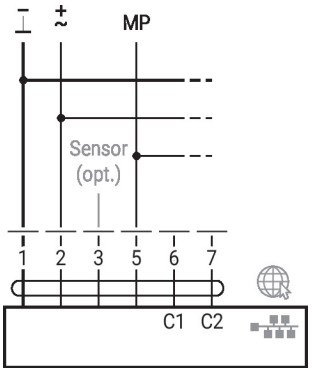

MP-Bus via 2-wire connection, local power supply

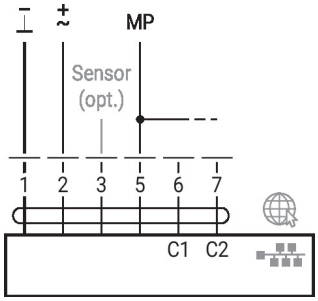

M-Bus via Converter M-Bus

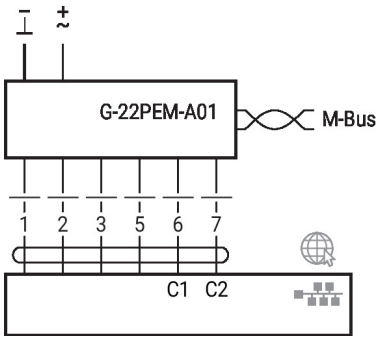

Wiring diagram

M-Bus parallel Modbus TCP or BACnet/IP

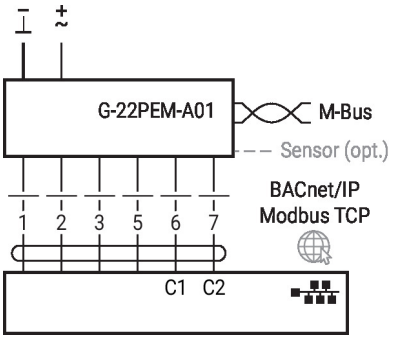

M-Bus parallel Modbus TCP or BACnet/IP with PoE

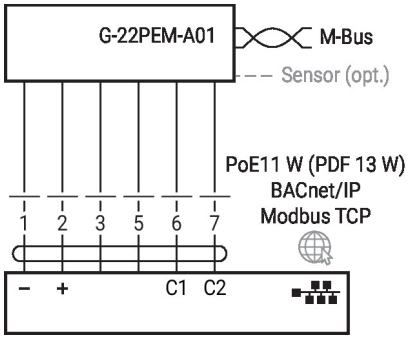

M-Bus parallel Modbus RTU or BACnet MS/TP

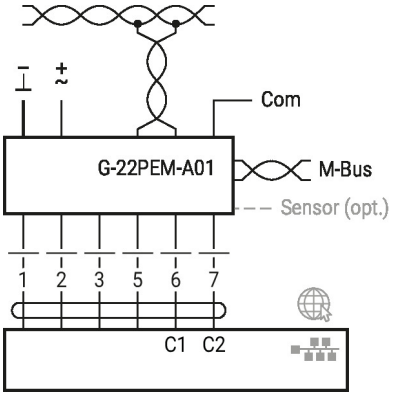

Connection with active sensor

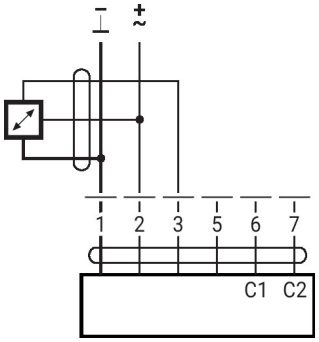

Connection with switching contact

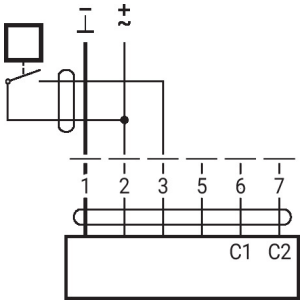

Connection with passive sensor

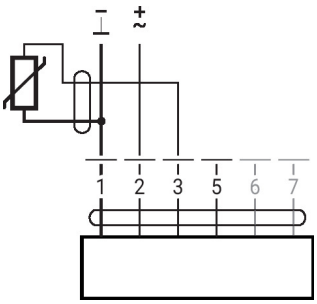

Dimensions

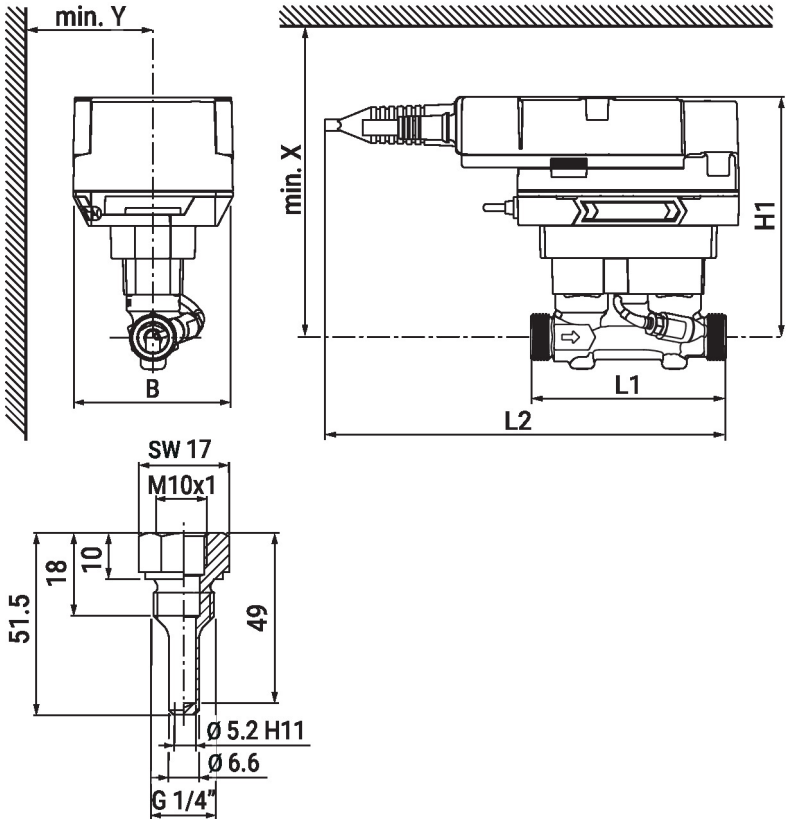

Thermowell for temperature sensor T1

Type	DN	L1 [mm]	L2 [mm]	B [mm]	H1 [mm]	X [mm]	Y [mm]	Weight
22PE-1UC	15	110	230	90	136	206	85	1.3 kg
22PE-1UD	20	130	230	90	136	206	85	1.5 kg
22PE-1UE	25	135	230	90	140	210	85	1.6 kg
22PE-1UF	32	140	230	90	143	213	85	1.8 kg
22PE-1UG	40	145	230	90	147	217	85	2.1 kg
22PE-1UH	50	145	230	90	152	222	85	2.6 kg

Further documentation

- Overview MP Cooperation Partners
- Description Data-Pool Values
- BACnet Interface description
- Modbus Interface description
- Installation instructions
- Operating instructions
- Quick Guide – Belimo Assistant 2