Thermoelectric tripping device for fire dampers in ventilation and air-conditioning systems, with connection plugs for simple integration in control and monitoring devices

- Nominal voltage AC/DC 24 V
- Response temperature duct 72°C
- Duct probe length 65 mm
- Tested acc. to ISO 10294-4

Picture may differ from product

Technical data

Electrical data	Nominal voltage	AC/DC 24 V
	Nominal voltage frequency	50/60 Hz
	Rated current	1 A
	AC/DC throughput resistance	<1 Ω
	Connection supply	Cable with connector plug 1 m, 2x 0.75 mm², Betaflam cable heat-resistant up to 145°C
	Connection plug	Plug 2-pole, suitable for control units BSIA24-48/-R and communication and power supply units BKN..
Functional data	Probe length	65 mm
Safety data	Response temperature thermal fuse	Duct inside temperature 72°C (colour black) Duct outside temperature 72°C
	Protection class IEC/EN	III, Safety Extra-Low Voltage (SELV)
	Degree of protection IEC/EN	IP54
	EMC	CE according to 2014/30/EU
	Low voltage directive	CE according to 2014/35/EU
	Hygiene test	According to VDI 6022 Part 1
	Rated impulse voltage supply	0.8 kV
	Pollution degree	3
	Ambient humidity	Max. 95% RH, non-condensing
	Ambient temperature	-30...55°C [-22...131°F]
	Storage temperature	-40...55°C [-40...131°F]
	Servicing	maintenance-free
Weight	Weight	0.092 kg

Safety notes

- The device must not be used outside the specified field of application, especially not in aircraft or in any other airborne means of transport.
- Cables must not be removed from the device.
- The device may only be opened at the manufacturer's site. It does not contain any parts that can be replaced or repaired by the user.
- The device contains electrical and electronic components and must not be disposed of as household refuse. All locally valid regulations and requirements must be observed.

Product features

Operating mode

The thermoelectric tripping device complies with the specific requirements of the standard ISO 10294-4.

If the duct outside temperature of 72°C is exceeded, the thermal fuse for the duct outside temperature will respond. If the duct inside temperature of 72°C is exceeded, the thermal fuse for the duct inside temperature will respond. When one of the thermal fuses responds, the supply voltage is interrupted permanently and irreversibly.

The thermal fuse for the duct outside temperature protects the actuator from overheating and cannot be replaced. The actuator must be replaced when the thermal fuse for the duct outside temperature is triggered. The thermal fuse for the duct inside temperature can be replaced, see section "Accessories".

The function of the system (interruption of the supply voltage) can be checked by pressing the test button.

Simple direct mounting

Installation is carried out with the pre-assembled, self-drilling and self-tapping screws.

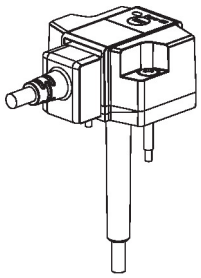

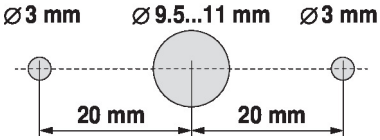

Connection

The connecting cable of the thermoelectric tripping device is equipped with a connection plug. This allows it to be easily connected to suitable control or monitoring devices.

Response temperature thermal fuse

The response temperature of the thermal fuse for the duct inside temperature is 72°C (factory default). Optionally, 95°C, 120°C and 140°C can also be used. See section "Accessories".

The response temperature is indicated by the material colour of the duct probe and is also shown on the product data label:

Black (BK) = 72°C (standard)

Grey (GY) = 95°C (as an option with ZBAT95)

Orange (OG) = 120°C (as an option with ZBAT120)

Red (RD) = 140°C (as an option with ZBAT140)

The response temperature of the thermal fuse for the duct outside temperature is fixed at 72°C and cannot be changed.

Probe length

The standard length of the duct probe is 65 mm. A length of 90 mm is also available as an option. This option is marked with "/9" in the product name. See section "Accessories".

Parts included

Screws

Accessories

Electrical accessories

Description	Type
Blanking cover for BAT (without thermal fuse for duct inside temperature)	ZBAT0

Accessories

Description	Type
Spare tripping element for BAT, Duct inside temperature 72°C (colour black), Probe length 65 mm	ZBAT72
Spare tripping element for BAT, Duct inside temperature 72°C (colour black), Probe length 90 mm	ZBAT72/9
Spare tripping element for BAT, Duct inside temperature 95°C (colour grey), Probe length 65 mm	ZBAT95
Spare tripping element for BAT, Duct inside temperature 95°C (colour grey), Probe length 90 mm	ZBAT95/9
Spare tripping element for BAT, Duct inside temperature 120°C (colour orange), Probe length 65 mm	ZBAT120
Spare tripping element for BAT, Duct inside temperature 140°C (colour red), Probe length 65 mm	ZBAT140

Electrical installation

Supply from isolating transformer.

Wire colours:
Tf1 = Thermal fuse for duct outside temperature
Tf2 = Thermal fuse for duct inside temperature (replaceable)

Wiring diagrams

AC/DC 24 V

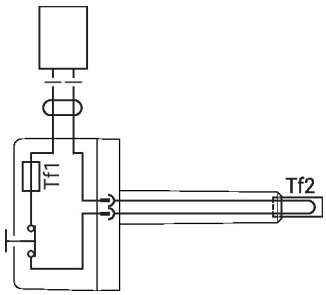
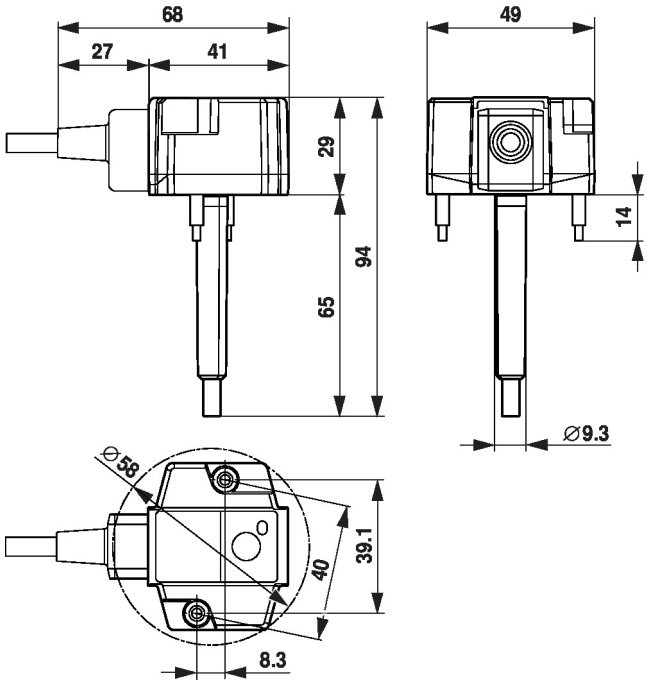
Dimensions