Rotary actuator for zone valves

- Torque motor 1 Nm
- Nominal voltage AC/DC 24 V
- Control modulating 0.5...10 V
- Position feedback 0.5...10 V
- Snap-assembly of the actuator
- Flow setting variable

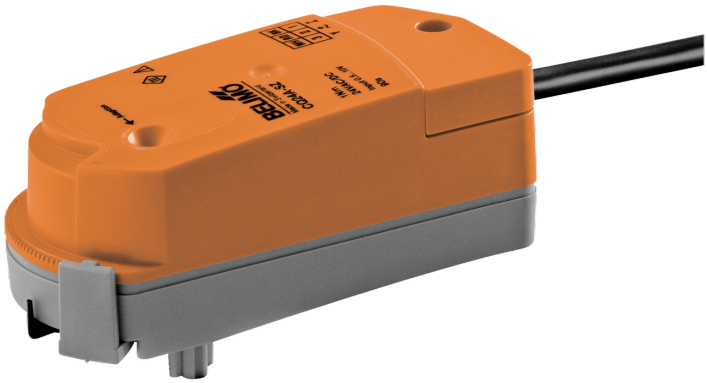

Picture may differ from product

Technical data

Electrical data	Nominal voltage	AC/DC 24 V
	Nominal voltage frequency	50/60 Hz
	Nominal voltage range	AC 19.2...28.8 V / DC 21.6...28.8 V
	Power consumption in operation	0.3 W
	Power consumption in rest position	0.3 W
	Power consumption for wire sizing	0.6 VA
	Connection supply / control	Cable 1 m, 4x 0.34 mm²
	Parallel operation	Yes (note the performance data)
Functional data	Torque motor	1 Nm
	Operating range Y	0.5...10 V
	Input impedance	100 kΩ
	Position feedback U	0.5...10 V
	Manual override	with actuator (clicked out)
	Running time motor	75 s / 90°
	Sound power level, motor	35 dB(A)
	Position indication	Mechanical
	Flow setting	see product features
Safety data	Protection class IEC/EN	III, Safety Extra-Low Voltage (SELV)
	Degree of protection IEC/EN	IP40
	EMC	CE according to 2014/30/EU
	Certification IEC/EN	IEC/EN 60730-1 and IEC/EN 60730-2-14
	Type of action	Type 1
	Rated impulse voltage supply / control	0.8 kV
	Pollution degree	2
	Ambient humidity	Max. 95% RH, non-condensing
	Ambient temperature	5...40°C [41...104°F]
	Storage temperature	-40...80°C [-40...176°F]
	Servicing	maintenance-free
Weight	Weight	0.21 kg

Safety notes

- This device has been designed for use in stationary heating, ventilation and air-conditioning systems and must not be used outside the specified field of application, especially in aircraft or in any other airborne means of transport.
- Outdoor application: only possible in case that no (sea) water, snow, ice, insolation or aggressive gases interfere directly with the device and that it is ensured that the ambient conditions remain within the thresholds according to the data sheet at any time.
- Only authorised specialists may carry out installation. All applicable legal or institutional installation regulations must be complied with during installation.
- The device may only be opened at the manufacturer's site. It does not contain any parts that can be replaced or repaired by the user.
- Cables must not be removed from the device.
- The device contains electrical and electronic components and must not be disposed of as household refuse. All locally valid regulations and requirements must be observed.

Product features

Operating mode

The actuator is controlled with a control signal Y (note the operating range) and drives to the position defined by the control signal. Measuring voltage U serves for the electrical display of the valve position 0...100% and as control signal for other actuators.

Simple direct mounting

Tool-free snap assembly.

The actuator can be plugged on the valve by hand (Caution! Just vertical movements). Pins must match the holes on the flange.

The mounting orientation in relation to the valve can be selected in 180° increments. (Possible two times)

Manual override

Click out the actuator and rotate the valve spindle with the help of the actuator.

Adjustable angle of rotation

The angle of rotation of the actuator can be changed by clip in 2.5° increments. This is used to set the maximum flow rate of the valve.

High functional reliability

The actuator is overload protected, requires no limit switches and automatically stops when the end stop is reached.

Flow setting

Adjustable Kv values (C2..Q-.., C4..Q-..) / V'max values (C2..QP(T)-..) are given in the respective zone valve data sheets.

2-way valve: Remove end stop clip and place at desired position.

3-way valve: Remove end stop clip (change-over application).

6-way valve: Remove end stop clip (cooling and heating application).

After every change of the flow setting by means of end stop clip, an adaptation must be triggered on the modulating actuators.

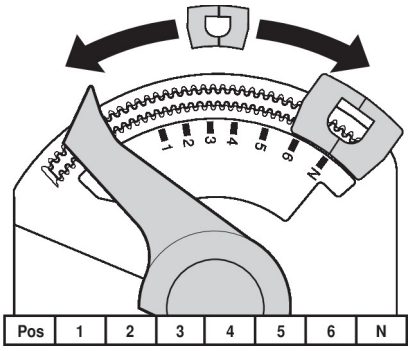

Accessories

Mechanical accessories	Description	Type
	Spindle extension CQ	ZCQ-E
	Housing cover CQ, Colour: white (RAL 9010)	ZCQ-W
	End stop clip, Multipack 5 pcs.	ZCQ-C
	End stop clip, Multipack 20 pcs.	Z-ESCM

Electrical installation

Supply from isolating transformer.

Parallel connection of other actuators possible. Observe the performance data.

Wire colours:
1 = black
2 = red
3 = white
5 = orange

AC/DC 24 V, modulating

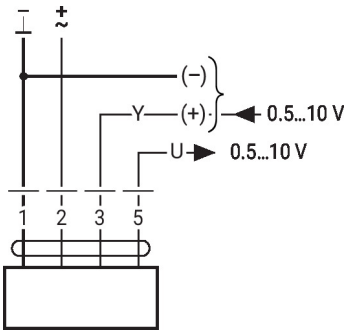

Override control (frost protection circuit)

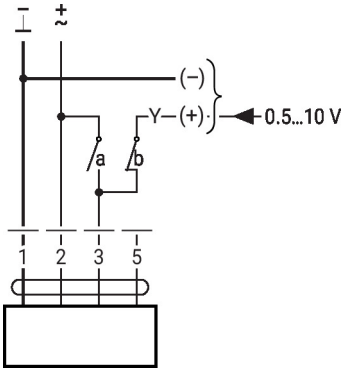

1	2	3 (a)	3 (b)	
				A - AB = 100%
				A - AB = 0%
			0.5 V	A - AB = 0%
			10 V	A - AB = 100%

Operating controls and indicators

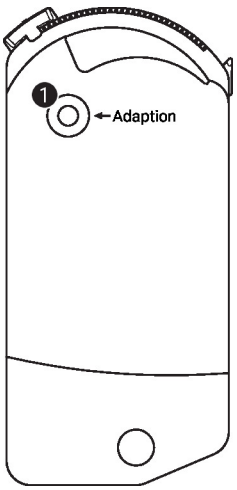

1 Push-button

Press button: Triggers angle of rotation adaptation, followed by standard mode

Dimensions

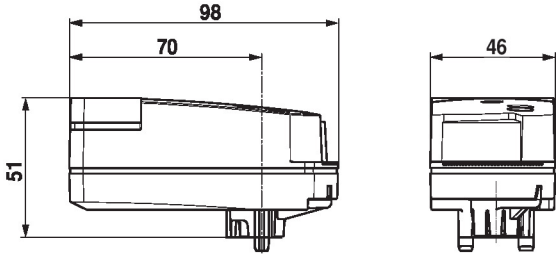

Further documentation

- The complete product range for water applications
- Data sheet for zone valves
- Installation instructions for zone valves and actuators
- General notes for project planning