Safety temperature limiter STB

For monitoring temperatures in heating water, hot water systems and other applications in heating, ventilation and air-conditioning systems. When the setpoint temperature is reached, the 1-pin changeover contact (SPDT) is switched and mechanically locked.
Manufacturer:
JUMO GmbH & Co. KG
Fulda - Deutschland
Item No.: 603070/0070-..

## Type Overview

| Type | Output signal temperature switch | Additional features | Capillary |
|---|---|---|---|
| EXT-J-00734645 | Changeover | Manual reset | 1 m |

## Technical data

| | | |
|---|---|---|
| **Electrical data** | Electrical connection | Spring loaded terminal max. 2.5 mm² |
| | Cable entry | Cable gland with strain relief M20x1.5 mm, for cable ø6...12 mm |
| **Functional data** | Medium | Air<br>Water |
| | Output signal temperature switch note | AC 230 V 16 (2.5) A @ Switch position 1-2<br>AC 230 V 2 (0.4) A @ Switch position 1-4<br>DC 230 V 0.25 A |
| | Switching reliability | Min. switching current 100 mA @ AC / DC 24 V |
| **Measuring data** | Measured values | Temperature |
| **Specification temperature passive** | Measuring range | 50...80°C [120...175°F] |
| | Adjustment range | 50...80 |
| | Accuracy temperature | +0K / -8K (lower half, 50...65°C)<br>+0K / -5K (upper half, 65...80°C) |
| **Safety data** | Degree of protection IEC/EN | IP54<br>IP protection with mounted sealing elements |
| | Pressure equipment directive | CE according to 2014/68/EU |
| | EU Conformity | CE Marking |
| | Certification IEC/EN | DIN EN 60730-1 and DIN EN 14597 |
| | Quality Standard | ISO 9001 |
| | Type of action | Type 2BFHKLNPV |
| | Ambient humidity | Max. 95% RH, non-condensing |
| | Ambient temperature | 0...80°C [32...175°F] |
| | Fluid temperature | Up to max. 110°C |
| | Storage temperature | -30...80°C [-22...176°F] |
| **Materials** | Housing | Bottom: PA (RAL 7001, silver grey)<br>Cover: ABS with inspection glass (PMMA)<br>Seal: NBR |
| | Cable gland | PA6, black |
| | Capillary | Copper |

## Safety notes

This device has been designed for use in stationary heating, ventilation and air-conditioning systems and must not be used outside the specified field of application. Unauthorised modifications are prohibited. The product must not be used in relation with any equipment that in case of a failure may threaten humans, animals or assets.

Ensure all power is disconnected before installing. Do not connect to live/operating equipment.

Only authorised specialists may carry out installation. All applicable legal or institutional installation regulations must be complied with during installation.

The device contains electrical and electronic components and must not be disposed of as household refuse. All locally valid regulations and requirements must be observed.

During installation, testing, servicing and troubleshooting of this product, it may be necessary to work with live electrical components. Have a qualified licensed electrician or other individual who has been properly trained in handling live electrical components perform these tasks. Failure to follow all electrical safety precautions when exposed to live electrical components could result in death or serious injury.

## Remarks

**Switching function**

If the temperature on the sensor exceeds the setpoint value, the changeover is activated by the transmission mechanics and the electrical circuit is opened resp. closed and the changeover is mechanically locked.

The unlocking difference is about 10K. If the temperature falls below the selected setpoint value then the changeover can be manually unlocked again.

**Reset function**

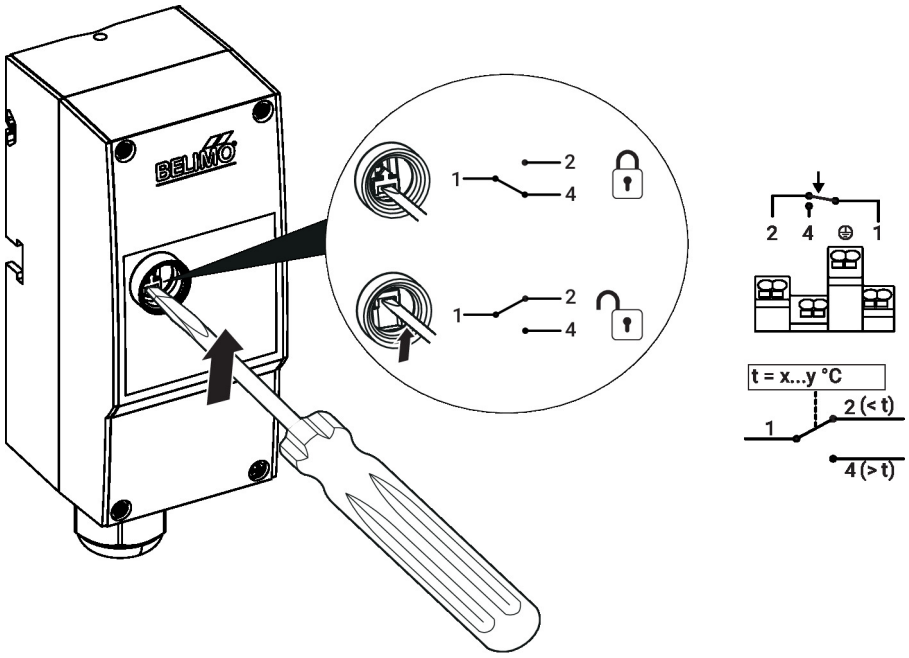

## Installation notes

**Installation situation**

The safety temperature limiter can be installed in four different ways.

Pipe contact mounting

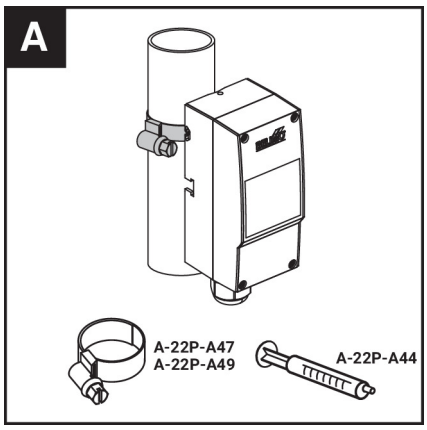


The tightening strap is included in the scope of delivery

Thermowell mounting

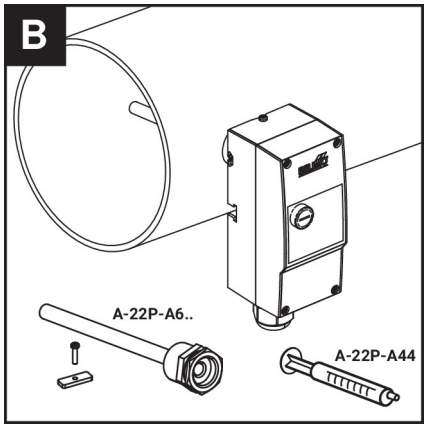


The thermowell A-22P-A6... is available as an optional accessory

Wall mounting with probe in flange

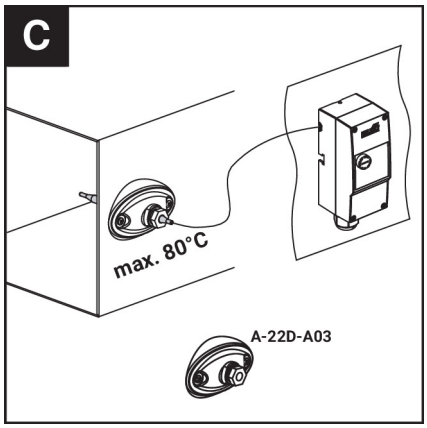


The A-22D-A03 flange is available as an optional accessory

## Installation notes

Wall mounting with probe in immersion sleeve

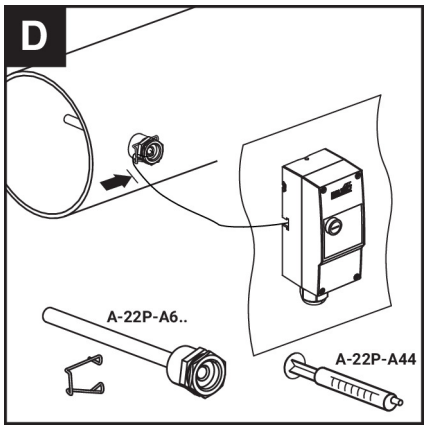


The thermowell A-22P-A6... is available as an optional accessory

## Parts included

Fixing strap for pipes from ø15...100 mm

## Accessories

| Optional accessories | Description | Type |
|---|---|---|
| | Thermal contact fluid | A-22P-A44 |
| | Fixing strap, for pipes ø20...110 mm [0.8...4.3"] | A-22P-A47 |
| | Fixing strap, for pipes ø20...250 mm [0.8...9.8"] | A-22P-A49 |
| | Mounting flange for sensor probe 6 mm, up to max. 120°C [248°F], Plastic | A-22D-A03 |

| Recommended accessories water | Description | Type |
|---|---|---|
| | Thermowell kit (fabricated) Brass nickel-plated, 100 mm, G 1/2", SW22 | A-22P-A61 |
| | Thermowell kit (fabricated) Brass nickel-plated, 150 mm, G 1/2", SW22 | A-22P-A62 |
| | Thermowell kit (fabricated) Brass nickel-plated, 200 mm, G 1/2", SW22 | A-22P-A63 |
| | Thermowell kit (fabricated) Stainless steel, 100 mm, G 1/2", SW22 | A-22P-A64 |
| | Thermowell kit (fabricated) Stainless steel, 150 mm, G 1/2", SW22 | A-22P-A65 |
| | Thermowell kit (fabricated) Stainless steel, 200 mm, G 1/2", SW22 | A-22P-A66 |

## Wiring diagram

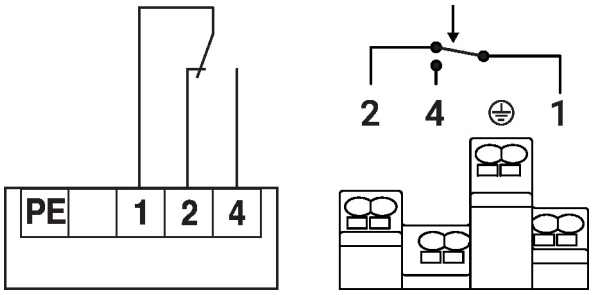


If the capillary leaks, the electrical circuit 1-4 is permanently closed. Unlocking is no longer possible.

## Dimensions

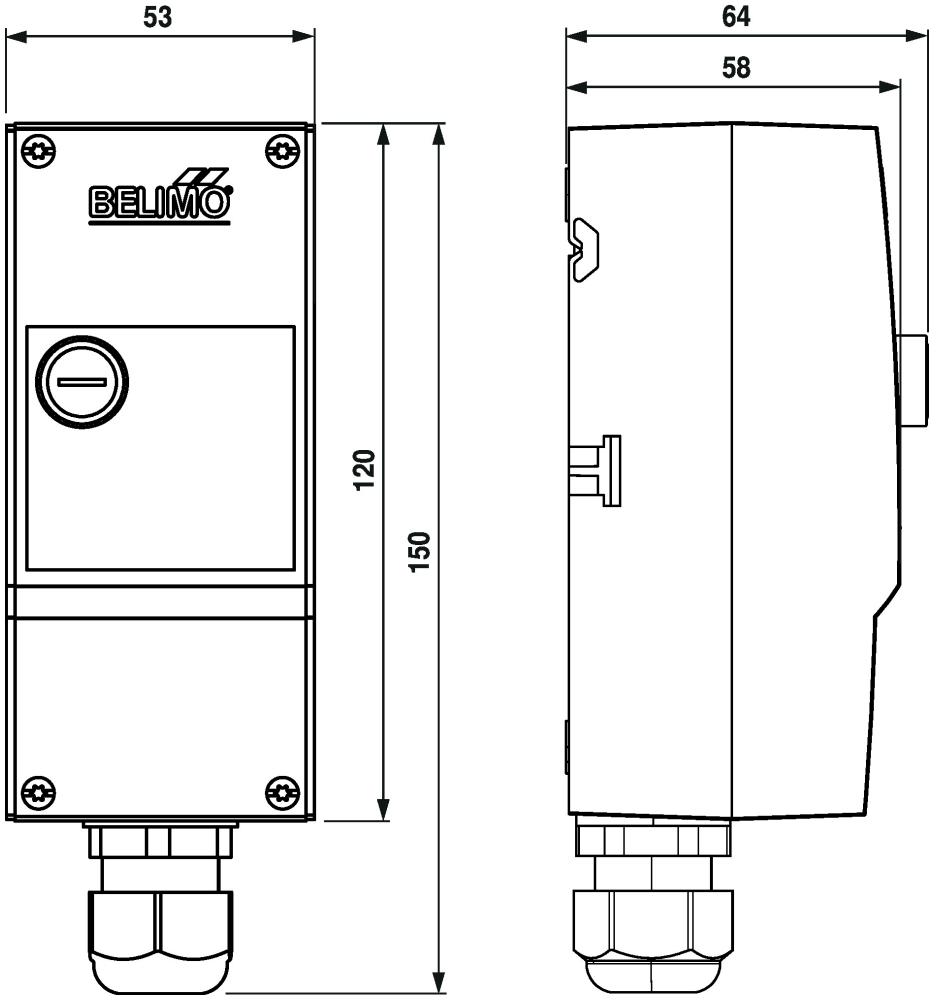


| Type | Weight |
|---|---|
| EXT-J-00734645 | 0.31 kg |