RetroFIT+ rotary actuator for rotary valves and butterfly valves

- Torque motor 40 Nm
- Nominal voltage AC/DC 24 V
- Control Open/close

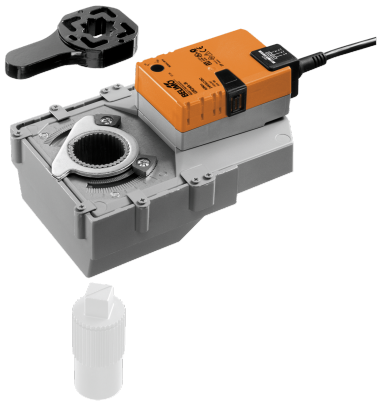

Picture may differ from product

Technical data

Electrical data	Nominal voltage	AC/DC 24 V
	Nominal voltage frequency	50/60 Hz
	Nominal voltage range	AC 19.2...28.8 V / DC 19.2...28.8 V
	Power consumption in operation	4 W
	Power consumption in rest position	2 W
	Power consumption for wire sizing	6 VA
	Connection supply / control	Cable 1 m, 3x 0.75 mm^2
	Parallel operation	Yes (note the performance data)
Functional data	Torque motor	40 Nm
	Manual override	with push-button, can be locked
	Running time motor	150 s / 90°
	Sound power level, motor	45 dB(A)
	Position indication	Mechanical, integrated
Safety data	Protection class IEC/EN	III, Safety Extra-Low Voltage (SELV)
	Power source UL	Class 2 Supply
	Degree of protection IEC/EN	IP54
	Degree of protection NEMA/UL	NEMA 2
	Housing	UL Enclosure Type 2
	EMC	CE according to 2014/30/EU
	Certification IEC/EN	IEC/EN 60730-1 and IEC/EN 60730-2-14
	UL Approval	cULus according to UL60730-1A, UL60730-2-14 and CAN/CSA E60730-1 The UL marking on the actuator depends on the production site, the device is UL-compliant in any case
	Type of action	Type 1
	Rated impulse voltage supply / control	0.8 kV
	Pollution degree	3
	Ambient humidity	Max. 95% RH, non-condensing
	Ambient temperature	0...50°C [32...122°F]
	Storage temperature	-40...80°C [-40...176°F]
	Servicing	maintenance-free
Mechanical data	Connection flange	F05/F07
Weight	Weight	1.9 kg

Safety notes

- This device has been designed for use in stationary heating, ventilation and air-conditioning systems and must not be used outside the specified field of application, especially in aircraft or in any other airborne means of transport.
- Outdoor application: only possible in case that no (sea) water, snow, ice, insolation or aggressive gases interfere directly with the device and that it is ensured that the ambient conditions remain within the thresholds according to the data sheet at any time.
- Only authorised specialists may carry out installation. All applicable legal or institutional installation regulations must be complied with during installation.
- The switch for changing the direction of rotation may only be operated by authorised specialists. The direction of rotation must not in particular be reversed in a frost protection circuit.
- The surface temperature between actuator and fitting may not exceed 50°C.
- The device may only be opened at the manufacturer's site. It does not contain any parts that can be replaced or repaired by the user.
- Cables must not be removed from the device.
- The device contains electrical and electronic components and must not be disposed of as household refuse. All locally valid regulations and requirements must be observed.

Product features

Application

For rotary valves and butterfly valves with the following mechanical specifications:

– ISO 5211: F05 or F07 (hole circle diameter on the flange for mounting the fitting)

– ISO 5211: quadratic or flat head spindle head geometry

Tappet shaft

The form fit adapter is not included in the scope of delivery (see «Accessories»).

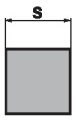

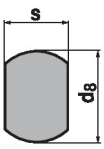

Type	s [mm]
ZGV-14	14
ZGV-16	16
ZGV-17	17
ZGV-19	19

Type	s [mm]	d_8 [mm]
ZGF-14	14	18
ZGF-17	17	22

Simple direct mounting

Simple direct mounting on the rotary valve or butterfly valve with mounting flange. The mounting orientation in relation to the fitting can be selected in 90° steps.

Manual override

Manual override with push-button possible (the gear train is disengaged for as long as the button is pressed or remains locked).

Adjustable angle of rotation

Adjustable angle of rotation with mechanical end stops.

High functional reliability

The actuator is overload protected, requires no limit switches and automatically stops when the end stop is reached.

Accessories

Electrical accessories

Description	Type
Auxiliary switch 1x SPDT add-on	S1A
Auxiliary switch 2x SPDT add-on	S2A
Feedback potentiometer 140 Ω add-on	P140A
Feedback potentiometer 1 kΩ add-on	P1000A

Accessories

	Description	Type
	Feedback potentiometer 10 kΩ add-on	P10000A
Mechanical accessories	**Description**	**Type**
	Form fit adapter square 14x14x40 mm (LxWxH)	ZGV-14
	Form fit adapter square 16x16x40 mm (LxWxH)	ZGV-16
	Form fit adapter square 17x17x20 mm (LxWxH)	ZGV-17
	Form fit adapter square 19x19x40 mm (LxWxH)	ZGV-19
	Form fit adapter flat head 14xø18x33 mm (WxøxH)	ZGF-14
	Form fit adapter flat head 17xø22x33 mm (WxøxH)	ZGF-17

Electrical installation

Supply from isolating transformer.
Parallel connection of other actuators possible. Observe the performance data.
Direction of rotation switch is covered. Factory setting: Direction of rotation Y2.

Wire colours:
1 = black
2 = red
3 = white

AC/DC 24 V, open/close

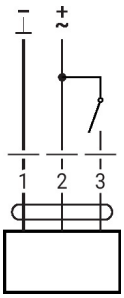

AC/DC 24 V, open/close (two-wire)

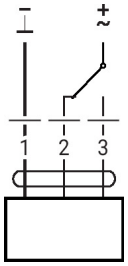

1	2	3	
			A - AB = 0%
			A - AB = 100%

Dimensions

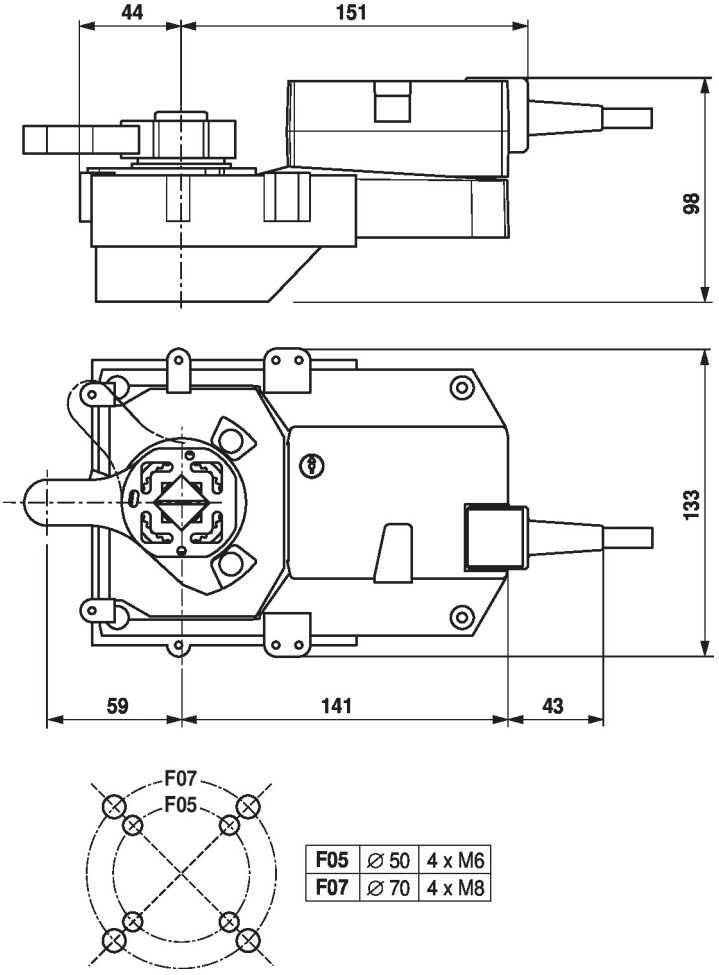

F05	∅ 50	4 x M6
F07	∅ 70	4 x M8

Further documentation

- General notes for project planning