Communicative damper actuator for adjusting dampers in technical building installations

- Torque motor 10 Nm
- Nominal voltage AC/DC 24 V
- Control communicative
- Communication via KNX (S-Mode)
- Conversion of sensor signals

Picture may differ from product

Technical data

Electrical data	Nominal voltage	AC/DC 24 V
	Nominal voltage frequency	50/60 Hz
	Nominal voltage range	AC 19.2...28.8 V / DC 21.6...28.8 V
	Power consumption in operation	3.5 W
	Power consumption in rest position	1.4 W
	Power consumption for wire sizing	6 VA
	Connection supply / control	Cable 1 m, 6x 0.75 mm²
Data bus communication	Communicative control	KNX (S-Mode)
	Number of nodes	max. 64 per line segment, reduce number of nodes with connecting cable with short lines
	Communication medium	KNX TP
	Configuration mode	S-Mode
	Current consumption of KNX-Bus	max. 5 mA
Functional data	Torque motor	10 Nm
	Torque variable	25%, 50%, 75% reduced
	Position accuracy	±5%
	Direction of motion motor	selectable with switch 0/1
	Direction of motion variable	electronically reversible
	Direction of motion note	Y = 0%: At switch position 0 (ccw rotation) / 1 (cw rotation)
	Manual override	with push-button, can be locked
	Running time motor	150 s / 90°
	Running time motor variable	43...173 s
	Sound power level, motor	35 dB(A)
	Adaptation setting range	manual
	Adaptation setting range variable	No action Adaptation when switched on Adaptation after pushing the manual override button
	Override control, controllable via bus communication	MAX (maximum position) = 100% MIN (minimum position) = 0% ZS (intermediate position) = 50%
	Override control variable	MAX = (MIN + 32%)...100% MIN = 0%...(MAX – 32%) ZS = MIN...MAX
	Configuration	via Belimo Assistant 2 Fast addressing 1...16 via push button possible
	Mechanical interface	Universal shaft clamp 8...26.7 mm
	Position indication	Mechanical, pluggable

Technical data

Safety data	Protection class IEC/EN	III, Safety Extra-Low Voltage (SELV)
	Degree of protection IEC/EN	IP54
	EMC	CE according to 2014/30/EU
	Certification IEC/EN	IEC/EN 60730-1 and IEC/EN 60730-2-14
	Hygiene test	According to VDI 6022 Part 1
	Type of action	Type 1
	Rated impulse voltage supply / control	0.8 kV
	Pollution degree	3
	Ambient humidity	Max. 95% RH, non-condensing
	Ambient temperature	-30...50°C [-22...122°F]
	Storage temperature	-40...80°C [-40...176°F]
	Servicing	maintenance-free
Weight	Weight	0.77 kg

Safety notes

- This device has been designed for use in stationary heating, ventilation and air-conditioning systems and must not be used outside the specified field of application, especially in aircraft or in any other airborne means of transport.
- Outdoor application: Only possible if no (sea) water, snow, ice, sunlight or aggressive gases act directly on the device and if it is ensured that the ambient conditions remain within the limit values specified in the data sheet at all times.
- Only authorised specialists may carry out installation. All applicable legal or institutional installation regulations must be complied with during installation.
- The device may only be opened at the manufacturer's site. It does not contain any parts that can be replaced or repaired by the user.
- Cables must not be removed from the device.
- To calculate the torque required, the specifications supplied by the damper manufacturers concerning the cross-section and the design, as well as the installation situation and the ventilation conditions must be observed.
- The device contains electrical and electronic components and must not be disposed of as household refuse. All locally valid regulations and requirements must be observed.

Product features

Operating mode
The actuator is equipped with an integrated interface for KNX (S-Mode) and can be connected with all KNX devices that have corresponding data points available.

Converter for sensors
Connection option for a sensor (passive or active sensor or switching contact). In this way, the analogue sensor signal can be easily digitised and passed along to KNX.

Configurable device
The factory settings cover the most common applications. As desired, individual parameters can be adapted for specific systems or servicing with a service tool (e.g. Belimo Assistant 2, ZTH EU) or the ETS planning and commissioning tool.

Simple direct mounting
Simple direct mounting on the damper shaft with a universal shaft clamp, supplied with an anti-rotation mechanism to prevent the actuator from rotating.

Manual override
Manual override with push-button possible (the gear train is disengaged for as long as the button is pressed or remains locked).

Adjustable angle of rotation
Adjustable angle of rotation with mechanical end stops.

High functional reliability
The actuator is overload protected, requires no limit switches and automatically stops when the end stop is reached.

Product features

Home position

The first time the supply voltage is switched on, i.e. at the time of commissioning, the actuator carries out a synchronisation. The synchronisation is in the home position (0%).

The actuator then moves into the position defined by the control signal.

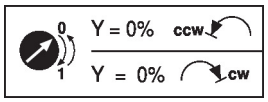

Adaptation and synchronisation

An adaptation can be triggered manually by pressing the "Adaptation" button or with Belimo Assistant 2. Both mechanical end stops are detected during the adaptation (entire setting range).

Automatic synchronisation after pressing the manual override button is configured. The synchronisation is in the home position (0%).

The actuator then moves into the position defined by the control signal.

A range of settings can be made using Belimo Assistant 2.

Accessories

Tools

Description	Type
Service tool for wired and wireless setup, on-site operation and troubleshooting.	Belimo Assistant 2
Belimo Assistant Link Bluetooth and USB to NFC and MP-Bus converter for configurable and communicative devices	LINK.10
Connecting cable 5 m, A: RJ11 6/4 LINK.10, B: 6-pin for connection to service socket	ZK1-GEN
Connecting cable 5 m, A: RJ11 6/4 LINK.10, B: free wire end for connection to MP/PP terminal	ZK2-GEN

Electrical accessories

Description	Type
Auxiliary switch 1x SPDT add-on	S1A
Auxiliary switch 2x SPDT add-on	S2A
Feedback potentiometer 140 Ω add-on	P140A
Feedback potentiometer 1 kΩ add-on	P1000A
Feedback potentiometer 10 kΩ add-on	P10000A

Mechanical accessories

Description	Type
Actuator arm for standard shaft clamp (one-sided)	AH-25
Shaft extension 240 mm ø20 mm for damper shaft ø8...22.7 mm	AV8-25
Ball joint suitable for damper crank arm KH8	KG8
Ball joint suitable for damper crank arm KH8 / KH10	KG10A
Damper crank arm Slot width 8.2 mm, clamping range ø10...18 mm	KH8
Shaft clamp one-sided, clamping range ø8...26 mm with insert, Multipack 20 pcs.	K-ENMA
Shaft clamp one-sided, clamping range ø8...26 mm, Multipack 20 pcs.	K-ENSA
Shaft clamp reversible, clamping range ø8...20 mm	K-NA
Form fit insert 8x8 mm, Multipack 20 pcs.	ZF8-NMA
Form fit insert 10x10 mm, Multipack 20 pcs.	ZF10-NSA
Form fit insert 12x12 mm, Multipack 20 pcs.	ZF12-NSA
Form fit insert 15x15 mm, Multipack 20 pcs.	ZF15-NSA
Form fit insert 16x16 mm, Multipack 20 pcs.	ZF16-NSA
Mounting kit for linkage operation for flat installation	ZG-NMA
Anti-rotation mechanism 180 mm, Multipack 20 pcs.	Z-ARS180
Baseplate extension for NM..A to NM..	Z-NMA
Position indicator, Multipack 20 pcs.	Z-PI

Electrical installation

Supply from isolating transformer.

Electrical installation

Wire colours:
1 = black
2 = red
3 = white
5 = orange
6 = pink
7 = grey

Functions:
D+ = KNX+ (pink > red)
D- = KNX- (grey > black)
The connection to the KNX line should take place via WAGO connecting terminals 222/221.

Connection without sensor

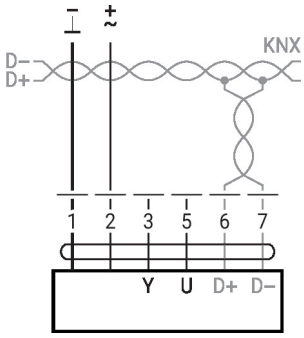

Converter for sensors

Connection with passive sensor, e.g. Pt1000, Ni1000, NTC

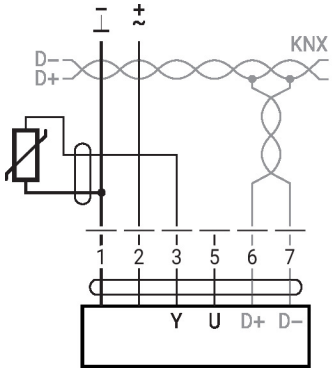

Ni1000	−28...+98°C	850...1600 Ω [2]
PT1000	−35...+155°C	850...1600 Ω [2]
NTC	−10...+160°C [1]	200 Ω...60 kΩ [2]

1) depending on type
2) Resolution 1 Ohm
Compensation of the measured value is recommended

Connection with switching contact, e.g. differential pressure switch

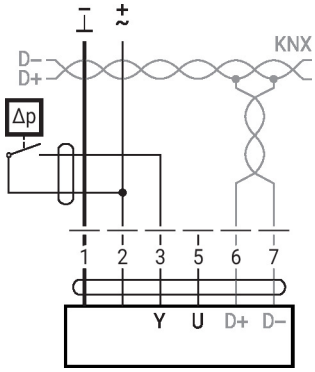

Switching contact requirements:
The switching contact must be able to switch a current of 16 mA at 24 V accurately.

Connection with active sensor, e.g. 0...10 V @ 0...50°C

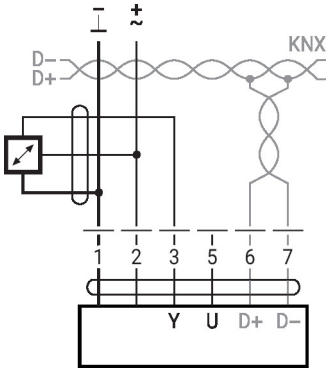

Possible voltage range: 0...32 V
Resolution 30 mV
• Switching current 16 mA @ 24 V
• Start point of the operating range must be configured on the KNX actuator as ≥0.5 V

KNX group objects

Name	Type	Flags					Data point type				Values range
		C	R	W	T	U	ID	DPT_Name	Format	Unit	
Setpoint	I	C	–	W	–	–	5.001	_percentage	1 Byte	%	[0...100] Resolution 0.4%
Setpoint Heating	I	C	–	W	T	–	5.001	_percentage	1 Byte	%	[0...100] Resolution 0.4%
Setpoint Cooling	I	C	–	W	–	–	5.001	_percentage	1 Byte	%	[0...100] Resolution 0.4%
Override control	I	C	–	W	–	–	20.*	_enum	1 Byte	–	0 = no override 1 = Open 2 = Closed 3 = Min 4 = Mid 5 = Max
Reset	I	C	–	W	–	–	1.015	_reset	1 Bit	–	0 = no action 1 = reset
Adaptation	I	C	–	W	–	–	1.017	_switch	1 Bit	–	0 = no action 1 = adapt
Testrun	I	C	–	W	–	–	1.017	_switch	1 Bit	–	0 = no action 1 = Testrun
Min	I/O	C	R	W	–	–	5.001	_percentage	1 Byte	%	[0...100] Resolution 0.4%
Max	I/O	C	R	W	–	–	5.001	_percentage	1 Byte	%	[0...100] Resolution 0.4%
Relative position	O	C	R	–	T	–	5.001	_percentage	1 Byte	%	[0...100] Resolution 0.4%
Absolute position	O	C	R	–	T	–	8.011 7.011	_rotation_angle _length	2 Byte	° mm	[–32'768...32'768] [0...65'535]
Fault state	O	C	R	–	T	–	1.002	_boolean	1 Bit	–	0 = no fault 1 = fault
Overridden	O	C	R	–	T	–	1.002	_boolean	1 Bit	–	0 = not active 1 = active
Gear disengage-ment active	O	C	R	–	T	–	1.002	_boolean	1 Bit	–	0 = engaged 1 = disengaged
Service information	O	C	R	–	T	–	22.*	_bitset16	2 Byte	–	Bit 0 (1) Excessive utilisation Bit 1 (2) Mechanical travel increased Bit 2 (4) Mechanical overload Bit 3 (8) – (Not used) Bit 4 (16) – (Not used) Bit 5 (32) – (Not used) Bit 6 (64) – (Not used) Bit 7 (128) – (Not used) Bit 8 (256) Internal activity Bit 9 (512) Bus watchdog triggered
Sensor value – Resistance R – Temperature – Relative Humidity – Air Quality – Voltage mV – Voltage scaled – Voltage scaled % – Switch – Dewpoint control	O	C	R	–	T	–	 14.060 9.001 9.007 9.008 9.020 7.* 5.001 1.001 1.001	 _resistance _temperature _humidity _parts/million _voltage _pulses_length _percentage _switch _switch	 4 Byte 2 Byte 2 Byte 2 Byte 2 Byte 2 Byte 1 Byte – –	 Ω °C % RH ppm mV mm % – –	 – [–273...670'760] [0...670'760] [0...670'760] [–670'760...670'760] [0...65'535] [0...100] 0/1 0/1

KNX group objects (continuation)

Setpoint Specification of actuator position in % between the parameterised Min and Max limits.
Recommended for 2-way and 3-way ball valves.

Override control Overriding the setpoint with defined override states.
As data point type, 1 Byte (unsigned) is recommended (DPT 20.*).
The override control is not saved persistently and is reset after a reboot of the device.

Reset Resetting the stored service messages
(see KNX group object *Service information*).

Adaptation Perform the adaptation.
An active adaptation is signaled in Bit 8 of *Service information.*

Testrun Performance of a testrun that checks the entire operating range.
An active adaptation is signaled in Bit 8 of *Service information.* After completion, detected faults (mechanical overload, mechanical travel increased) are signaled in *Service information.*

Min Minimum Limit (Position) in %.
⚠ This value is stored persistently on the device and must not be written to regularly. Regular writing to the object can lead to malfunctions.

Max Maximum Limit (Position) in %.
⚠ This value is stored persistently on the device and must not be written to regularly. Regular writing to the object can lead to malfunctions.

Relative position Current actuator position in %

Absolute position Absolute position/stroke
The data point type is to be selected depending on the type of movement:

[°] DPT 8.011
[mm] DPT 7.011

Fault state Collective fault based on Bit 0...Bit 7 of *Service information.*

Overridden Signaling of an active override control (OPEN/CLOSED)
The device can be commanded via the KNX group object *Override control* or via the forced switching at the input Y/3. Only the override controls „Open“ and Closed“ are signaled.

Gear disengagement active Signaling an active gear disengagement

Service information Detailed information regarding device status
As data point type, Bitset 16-Bit is recommended (DPT 22.*)
Status information:

Bit 0: Motor operation in relation to operating period too high
Bit 1: Mechanical travel increased: defined end position exceeded
Bit 2: Mechanical overload, i.e. defined end position not reached
Bit 3...7: not used with this device type
Bit 8: Internal activity: Synchronisation, Adaptation or Testrun is running
Bit 9: Bus watchdog trigger
Bit 10...15: Mechanical overload, i.e. defined end position not reached
Bit 0..2: Are stored by the device and can be reset with the KNX group object *Reset.*
As an alternative, the several bits can be read as collective fault state.

Sensor value The representation of the sensor value is dependent on the parameterization.
See section „KNX parameters – Sensor“

KNX parameters

Common

Setpoint at bus failure

A setpoint can be defined for cases of communication interruption.

Values range: None (last setpoint)
Open
Closed
Mid
Factory setting: None (last setpoint)

The monitoring of the communication takes place for the KNX group objects *Setpoint* and *Override control*. If none of the objects is written within the parameterised monitoring time, the bus fail position is set and signaled in the *Service information* (Bit 9).

Bus timeout [min]

Monitoring time for the detection of a communication interruption.

Values range: 1...120 min
Factory setting: –

Setpoint Mode

Two operating modes can be selected.

„Common object mode“ Recommended for operation with 2-way and 3-way ball valves and damper actuators.
Corresponds to the control of the actuator with a setpoint of 0...100%.

„Heating and Cooling separated“ Explicitly for the control of the valve actuator with 6-way ball valve.
Two setpoints are available as communication objects.
One setpoint for heating and one setpoint for cooling.
These two setpoints are used by the valve actuator in accordance with the 6-way valve characteristic curve for controlling heating and cooling sequences.

Increment for value update [%]

Actual values (position, volumetric flow) are transferred at the time of a value change insofar as these change by the parameterised difference value. If the relative value changes by the difference value, not only the relative actual value but also the absolute actual value are transferred.

Values range: 0...100%
Factory setting: 5%

The transfer is deactivated with 0% in the event of a value change.

Repetition time [s]

Repetition time for all position and sensor actual values. Status objects are not transferred except with a change.

Values range: 0...3’600 s
Factory setting: 0 = no periodic transmission

KNX workflows

Product database

The product database for the import in ETS4 or higher is available at the Belimo website.

Setting physical address

The programming of the physical address takes place by ETS and the programming button on the device.

If the programming button is not accessible or accessible only with difficulty, then the address can be set using a point-to-point connection: "Overwrite Individual Address: 15.15.255"

As a third possibility, the physical address can be programmed on the basis of the KNX series number (e.g. with Moov’n’Group). The KNX series number is placed on the device in two versions. One sticker can be removed for adhesion on the commissioning journal, for example.

Firmware upgrade

The KNX firmware of the device is updated automatically with the programming of the application program if the product database has a more recent version.

The first programming procedure takes somewhat longer in such cases (>1 min).

Resetting to KNX factory settings

If necessary, the device can be reset manually to the KNX factory settings (physical address, group address, KNX parameters).

For the reset, the programming button on the device must be pressed down for at least 5 s during start-up.

Operating controls and indicators

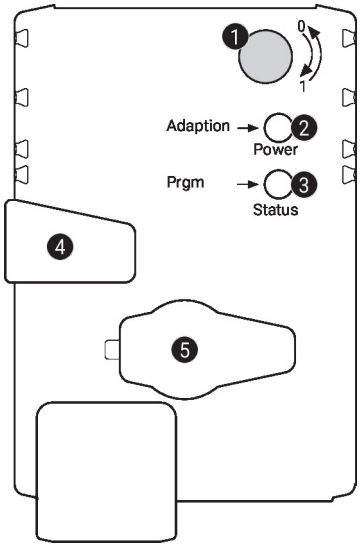

1 Direction-of-rotation switch

Switch over:	Direction of rotation changes

2 Push-button and LED display green

Off:	No power supply or malfunction
On:	In operation
Press button:	Triggers angle-of-rotation adaptation, followed by standard mode

3 Push-button and LED display yellow

Off:	The actuator is ready
On:	Adaptation or synchronisation process active or actuator in programming mode (KNX)
Flashing:	Connection test (KNX) active
Press button:	In operation (>3 s): Switch the programming mode on and off (KNX) When starting (>5 s): Reset to factory setting (KNX)

4 Manual override button

Press button:	Gear train disengages, motor stops, manual override possible
Release button:	Gear train engages, synchronisation starts, followed by standard mode

5 Service plug
For connecting configuration and service tools

Service

Using Belimo Assistant 2, device parameters can be modified. Belimo Assistant 2 can operate on a smartphone, tablet or PC. The available connection options vary depending on the hardware on which Belimo Assistant 2 is installed.

For more information about Belimo Assistant 2, refer to the Quick Guide – Belimo Assistant 2.

Wired connection

Belimo devices can be accessed by connecting Belimo Assistant Link to the USB port on a PC or laptop and to the Service Socket or MP-Bus wire on the device.

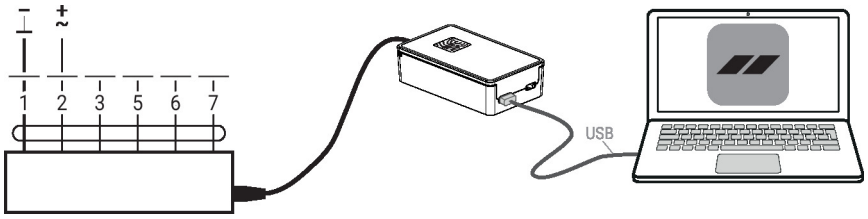

Dimensions

Shaft length

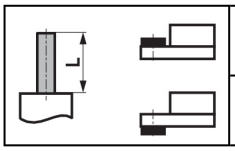	Min. 40
	Min. 20 mm [0.75"]

Clamping range

	8...26.7	≥8	≤26.7
*	8...20	≥8	≤20

*Option: Shaft clamp mounted below (accessories K-NA needed)

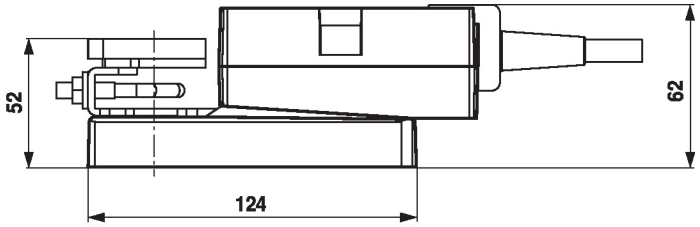

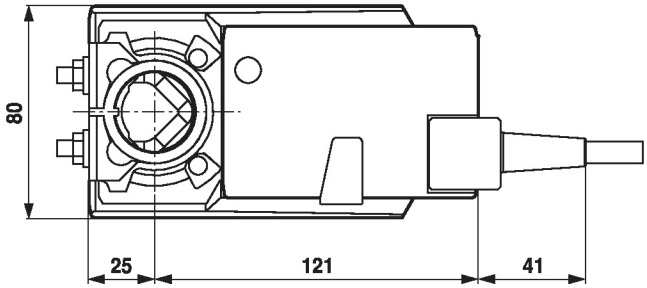

Further documentation

- Tool connections
- General notes for project planning
- Quick Guide – Belimo Assistant 2

Application notes

- For digital control of actuators in VAV applications patent EP 3163399 must be considered.